INSTRUCTION MANUAL CHANGE NOTICE

Mincom Division 3M COMPANY

Change 2
January 15, 1974

SERIES 79 RECORDER
PART NUMBER 79000A000

GENERAL

This change notice contains information which should be added to all Series 79 Recorder Instruction Manuals.

EFFECTIVITY

These changes apply to all Series 79 Recorder Instruction Manuals.

TEXT

Page 4-6, paragraph 4-18 – Change E17 to E11.

SCHEMATICS

Page 6-5/6-6 – Add C19 as shown. Add to note 5: Use 2.2 UFD, 35V.

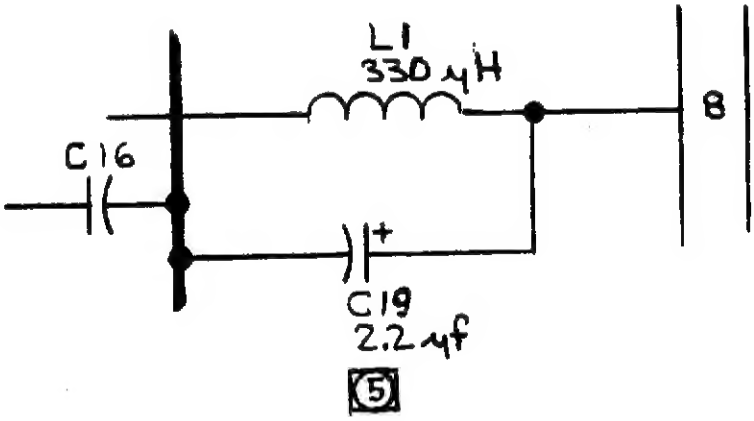

PARTS LISTS

Page 7-58 – Remove CR13 from listing CR9, CR11, CR13, CR14, CR18, CR19, and change quantity from 6 to 5.

Add CR13 to listing CR10, and change quantity from 1 to 2.

3M BRAND SERIES 79 RECORDER

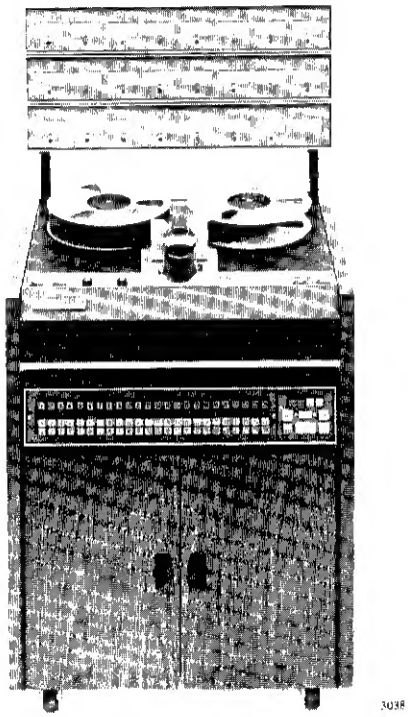

INSTRUCTION MANUAL

PROFESSIONAL AUDIO PRODUCTS

Mincom Division 3M COMPANY

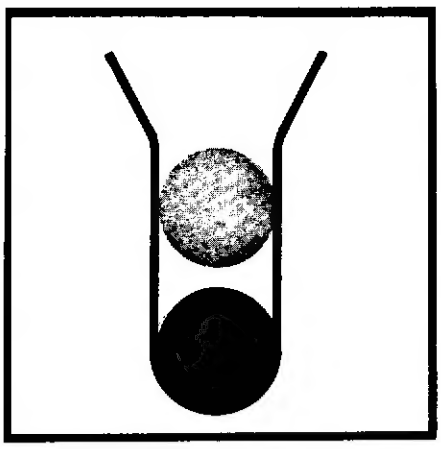

"ahead of its time"

3M BRAND PROFESSIONAL TAPE RECORDER

The 3M Brand Professional Tape Recorder you now own is the finest quality recording instrument available. It has been engineered to the world's most exacting standards for performance and reliability.

Your 3M Brand Professional Tape Recorder was tested at our factory, by electronic measuring equipment, prior to shipment. It met or surpassed every current specification. Therefore, it should operate with maximum performance and without trouble. If difficulties are encountered, however, the following warranty will be of value to you.

WARRANTY

The 3M Company warrants to the original purchaser that the 3M Professional Tape Recorder, or its electronic NAB system, or its "Isoloop" tape transport, or its magnetic heads* (if any of these components are purchased separately) is/are free of defects of material and/or workmanship for a period of *one year from date of delivery to the original purchaser.*

3M Company agrees to either replace or repair defective parts subject to the following provisions:

*This warranty shall not constitute any guarantee as to the duration of the life expectancy of magnetic heads, since that is affected by many variables depending upon use, speed, tape, and other factors.

CONDITIONS OF PARTS WARRANTY

The obligation of 3M under this warranty is limited to remedying any such defect by repairing or replacing defective parts. For the first ninety (90) days after delivery to the original purchaser, defects in materials and workmanship covered by this warranty will be remedied at no cost for labor or material to the original purchaser. During the balance of the first year after delivery to the original purchaser, repairs or replacement of defective parts will be made at no charge for material, but a reasonable charge for labor will be made to the original purchaser.

CONDITIONS OF WARRANTY

A. The attached warranty registration card must be completed and mailed to 3M at the address printed thereon, within ten (10) days from date of delivery of the equipment to original purchaser.

B. All defects must be reported within the warranty period to 3M, who will make warranty repairs found to be required either at the place of business of the purchaser or at the 3M factory to which any defective equipment shall be returned, transportation prepaid by the purchaser. Equipment shall not be returned to 3M without 3M's prior instructions to do so.

C. Purchaser shall not have used, or allowed to have been used in the equipment, any parts (except accessory items such as transistors, magnetic heads, tape, etc.) not supplied by 3M Company, nor shall this warranty cover damages to the 3M equipment, resulting from the incorporation of other than original systems compatible components or accessories.

D. The equipment must not have been altered or modified without the express approval of 3M; nor subjected to misuse, negligence or accident. Serial numbers must not have been altered, defaced or removed.

This warranty is made in lieu of all other warranties, expressed or implied, and 3M's only obligation shall be to repair or replace defective parts as provided in the warranty. 3M shall not otherwise be liable for any injury, loss or damage, direct or consequential, arising out of the use or the inability to use the equipment. Before using, purchaser shall determine the suitability of the equipment for his intended use and assumes all risks and liability whatsoever in connection therewith. The foregoing may not be changed except by an agreement signed by an officer of seller.

Mincom Division 3M COMPANY

300 SOUTH LEWIS ROAD • CAMARILLO, CALIFORNIA 93010

3M BRAND PROFESSIONAL TAPE RECORDER WARRANTY REGISTRATION

Model _____ Serial Number _____ Date _____

I hereby submit for validation this Warranty Registration Certificate for the 3M Brand Professional Tape Recorder identified above. I understand that the One Year Warranty accompanying this Certificate constitutes the sole warranty on this product, and that it is subject to the terms enumerated on said warranty, which I have read and agree to.

Name _____

Address _____

City _____ State _____ Zip Code _____

Which categories below best describe your recording application(s)?

- ☐ Broadcast
- ☐ Recording Studio
- ☐ Medical
- ☐ Film Producer
- ☐ Government
- ☐ Industrial
- ☐ Duplicator
- ☐ Education
- ☐ Instrumentation
- ☐ Other: _____

Warranty registration must be returned to: **3M COMPANY, Mincom Division, 300 S. Lewis Road, Camarillo California 93010** within ten days from date of delivery.

RETURN ADDRESS

NAME

ADDRESS

CITY STATE ZIP

PLACE
STAMP
HERE

3M COMPANY
Mincom Division
300 S. Lewis Road
Camarillo, California 93010

ATTN: PROFESSIONAL AUDIO PRODUCT

FOR SALES INFORMATION

WESTERN U. S.

Mincom Division
3M Company
300 South Lewis Road
Camarillo, California 93010
(805) 482-1911

EASTERN U. S.

Mincom Division
3M Company
4701 Lydell Avenue
Cheverly Industrial Center
Cheverly, Maryland 20781
(301) 773-5050

NORTHEAST

76 Bryant Road
Blackwood, New Jersey 08012
(609) 227-2228

FOR PARTS AND SERVICE

WESTERN U. S.

Mincom Division
3M Company
300 South Lewis Road
Camarillo, California 93010
(805) 482-1911

EASTERN U. S.

Mincom Division
3M Company
4701 Lydell Avenue
Cheverly Industrial Center
Cheverly, Maryland 20781
(301) 773-5050

LIST OF EFFECTIVE PAGES

This page indicates the effective pages for a specific issue of this publication. The latest issue of this publication may not be the correct version for your equipment. When ordering a publication, please specify the issue originally received with the equipment.

To order a publication, give the catalog number of this publication, and the complete manual number shown at the bottom of this page.

Issue, date and manual number are:

Issue	1	Aug. 72
Issue	2	Mar. 73
Issue	3	Sept. 73

TOTAL NUMBER OF PAGES IN THIS PUBLICATION IS 163 CONSISTING OF THE FOLLOWING:

Page No.	Issue No.	Page No.	Issue No.
Title	3	3-4	3
A	3	3-5 through 3-10	2
i	2	4-1, 4-2	2
ii, iii	3	4-3	3
iv	2	4-4 through 4-18	2
1-1 through 1-3	2	5-1	2
1-4	3	5-2 through 5-21/5-22	3
1-5 through 1-7/1-8	2	6-1/6-2 through 6-49/6-50	3
2-1, 2-2	2	7-1 through 7-77/7-78	3
3-1 through 3-3	2		

This manual is Catalog No. 83-5990-1388.

TABLE OF CONTENTS

		PAGE
SECTION I.	**GENERAL DESCRIPTION**	
1-1.	General	1-1
1-3.	Function	1-1
1-5.	Equipment Description	1-1
1-7.	Tape Transport	1-1
1-10.	Signal Electronics Assembly	1-5
1-11.	Display Panel	1-5
1-12.	Remote Control Assembly	1-5
1-14.	Power Supply	1-6
1-15.	Optional Accessories	1-6
1-17.	3M Brand Selectake	1-6
1-18.	3M Brand Series 79 Synchronizer/Reader	1-6
1-19.	Conversion Kits	1-6
1-20.	Input Transformers	1-7
1-21.	3M Brand SMPTE Code Generator	1-7
1-22.	Transport Remote Control	1-7
1-23.	Rack Mount Adapter	1-7
1-24.	Specifications	1-7
SECTION II.	**INSTALLATION**	
2-1.	Receipt Inspection	2-1
2-3.	Location Considerations	2-1
2-5.	Initial Setup	2-2
SECTION III.	**OPERATION**	
3-1.	General	3-1
3-3.	Tape Threading	3-1
3-5.	Transport Tape Motion Operation	3-7
3-7.	Monitoring	3-7
3-9.	In/Out Monitor Switching	3-7
3-10.	Recording	3-8
3-13.	Reproduce	3-8
3-15.	Cueing or Overdubbing	3-9
3-18.	Editing	3-10
SECTION IV.	**MAINTENANCE**	
4-1.	General	4-1
4-3.	Field Service	4-1
4-5.	Test Equipment	4-1
4-7.	Preventive Maintenance	4-1
4-9.	Cleaning	4-1
4-12.	Corrective Maintenance	4-1
4-14.	Power Supply Check	4-3

TABLE OF CONTENTS (Cont.)

		PAGE
SECTION IV.	MAINTENANCE (Cont.)	
4-15.	Capstan Servo PC Board	4-3
4-19.	Logic and Bias Oscillator PC Board	4-5
4-24.	Tape Transport Adjustments	4-7
4-36.	Signal Electronics Alignment	4-10
4-50.	Troubleshooting	4-15
4-53.	Factory Repair Service	4-16
SECTION V.	TECHNICAL DESCRIPTION	
5-1.	General	5-1
5-5.	Tape Transport Mechanical Functions	5-1
5-10.	Transport and Logic Circuitry	5-2
5-12.	Power Circuits	5-2
5-13.	Tape Threaded Condition and Standby	5-3
5-14.	From Stop to Play	5-3
5-15.	From Play to Stop	5-3
5-16.	From Stop to Rewind	5-4
5-17.	From Rewind to Stop	5-4
5-18.	From Stop to Forward	5-4
5-19.	From Forward to Stop	5-4
5-20.	From Forward to Rewind	5-4
5-21.	From Rewind to Forward	5-4
5-22.	From Rewind to Play	5-4
5-23.	From Forward to Play	5-4
5-24.	Forward/Rewind Logic	5-4
5-26.	Braking Circuit	5-5
5-27.	Tape Tension	5-5
5-28.	Record Mode	5-5
5-29.	Tape Runout	5-6
5-30.	Editing	5-6
5-31.	Fail-Safe	5-7
5-32.	Capstan Speed Switch	5-9
5-33.	Relays	5-9
5-34.	Bias Oscillator	5-9
5-35.	Capstan Servo	5-9
5-37.	Capstan Run	5-9
5-38.	Capstan Stop	5-11
5-39.	DC Amplifier and Output Transistors	5-11
5-40.	+5 Volt Regulator	5-11
5-41.	Supply and Take-Up Motor Circuitry	5-11
5-43.	Motor Drivers	5-11
5-45.	Remote Control Assembly	5-12
5-47.	Remote Transport Control Switches	5-12
5-49.	Master Signal Electronics Switches	5-13
5-57.	Function Assembly Switches	5-14
5-62.	Signal Electronics	5-15
5-64.	Decoder	5-15

TABLE OF CONTENTS (Cont.)

		PAGE
SECTION V.	**TECHNICAL DESCRIPTION (Cont.)**	
5-68.	Record, Reproduce, Cue, and Monitor Logic	5-15
5-73.	Speed Select Logic	5-16
5-74.	Bias and Erase Amplifiers	5-17
5-77.	Record Amplifier	5-17
5-78.	Reproduce Preamplifier	5-17
5-79.	Line Amplifier	5-17
5-80.	Cue Preamplifier	5-19/5-20
5-81.	Power Supply	5-19/5-20
SECTION VI.	**SCHEMATICS**	
6-1.	General	6-1/6-2
SECTION VII.	**PARTS LISTS**	
7-1.	General	7-1
7-3.	Ordering Replacement Parts	7-1

LIST OF ILLUSTRATIONS

Figure No.		Page
1-1	Series 79 Recorder	1-2
1-2	Series 79 Recorder (4 Track)	1-3
1-3	Isoloop Tape Drive	1-5
1-4	Signal Electronics Assembly	1-6
1-5	Remote Control Assembly	1-7
2-1	Outline Dimensions	2-1
2-2	Input/Output Connector Wiring	2-2
3-1	Operating Controls	3-1
3-2	Remote Control Assembly	3-2
3-3	Tape Threading	3-6
4-1	Tape Transport Adjustments, Top View	4-4
4-2	Tape Transport Adjustments, Bottom View	4-6
4-3	Capstan Idler Alignment	4-9
4-4	Capstan Idler Linkage Adjustment	4-10
4-5	Reel Height Adjustment	4-11
5-1	Tape Drive	5-2
5-2	Mute Defeat Circuit	5-8
5-3	Capstan Servo Pulse Generation Sequence	5-10
5-4	Signal Electronics	5-18
5-5	Signal Electronics Signal Flow Diagram	5-21/5-22

(Figures for Section VI are listed on page 6-1.)
(For Parts Lists Drawing Numbers see page 7-1.)

LIST OF TABLES

Table No.		Page
1-1	List of Components	1-4
3-1	Operating Controls and Indicators	3-2
4-1	Test Equipment or Equivalent	4-2
4-2	Troubleshooting Guide	4-16
5-1	Forward and Rewind Input Levels	5-5
6-1	List of Schematics	6-1/6-2
7-1	Parts Lists	7-1

SECTION I
GENERAL DESCRIPTION

1-1. GENERAL

1-2. The 3M Brand Series 79 Recorder, Part No. 79000A000, is manufactured by the Mincom Division of the 3M Company in Camarillo, California.

1-3. FUNCTION

1-4. The recorder is a versatile, multichannel, compact magnetic tape recorder for producing superior quality master recording tapes. The recorder can record and reproduce up to 24 tracks with full remote control operation, including synchronous cue (overdub). Tape editing can be accomplished at the console for 1, 2, and 4 track recorders. The patented Isoloop tape drive system incorporated in the tape transport provides flexibility of tape handling and ease of tape threading. A new standard of timing accuracy has been attained in the tape transport as a result of an entirely new capstan dc motor drive coupled with the Isoloop Drive. Variable internal speed control, and synchronization to external speed signal sources are incorporated. The packaging concepts provide greatly improved accessibility of components for alignment and maintenance purposes. The use of silicon solid-state devices in the electronic circuits provide greater stability and long-term reliability.

1-5. EQUIPMENT DESCRIPTION

1-6. The tape recorder can be configured to contain 24, 16, or 8, and 4, 2 or 1 track. Physically, each configuration consists of a tape transport pivot mounted in the top of rectangular plastic-laminated wood console (see figures 1-1 and 1-2). Below the transport is a signal electronics module assembly containing the record/reproduce electronics and operating mode switching circuits. Input and output transformers and connectors are accessible from the rear. A meter display panel mounted above the transport provides selective input/output signal monitoring of each channel. A self-contained solid-state power supply is fastened to the floor of the console, and a remote control assembly which is detachable from the front of the console allows the recorder to be operated up to 30 feet from the console (for 8, 16, and 24 tracks only). When the remote control assembly is detached, a panel fits into the front of the console. Table 1-1 lists major assemblies.

1-7. **TAPE TRANSPORT.** The tape transport contains the tape motion and tape handling controls, and performs certain electrical command functions common to each channel of the record/reproduce electronics. The POWER ON-OFF switch on the transport controls power to the entire system. Transports are provided with 2 inch, 1 inch, 1/2 inch, or 1/4 inch tape guides. The wide tape transport will accommodate 10-1/2 inch diameter NAB reels for the 1 inch width tape, and semi-precision video tape reels for the 2 inch width tape. The narrow tape transport will accommodate NAB hubs, or 7 inch plastic reels. Four electrically selectable capstan servo modes are available. The most common are 15 and 30 ips, variable 5 to 45 ips, and external sync. 7-1/2 and 15 ips speeds are also available by reversing a plug-in on the capstan servo pc board. The external sync accommodates control by a variable resistor or by a voltage source.

1-8. **Isoloop Tape Drive.** The tape transport mechanism is derived from designs used in instrumentation recorders, where standards of timing accuracy and wow and flutter are even more demanding than in audio recording. The heart of the patented Isoloop tape drive is the differential capstan which maintains a constant tape tension within the drive and positive contact of the tape against the heads (see figure 1-3). In addition, the unsupported tape path is extremely short in comparison to standard design tape recorders. The short tape path reduces longitudinal oscillation to a new low and eliminates the need for a series of tape guides to maintain a proper tape path.

1-9. The tape tension required to minimize flutter and hold the tape against the heads is generated within the closed loop by the differential drive capstan. The tape drive surface of the capstan is divided into regions of two different diameters. The incoming idler roller is contoured so as to press the tape firmly into the matching "grooves" (of the smaller diameter) of the capstan. The outgoing idler roller is shaped so as to press the tape firmly against

3038

Figure 1-1. Series 79 Recorder

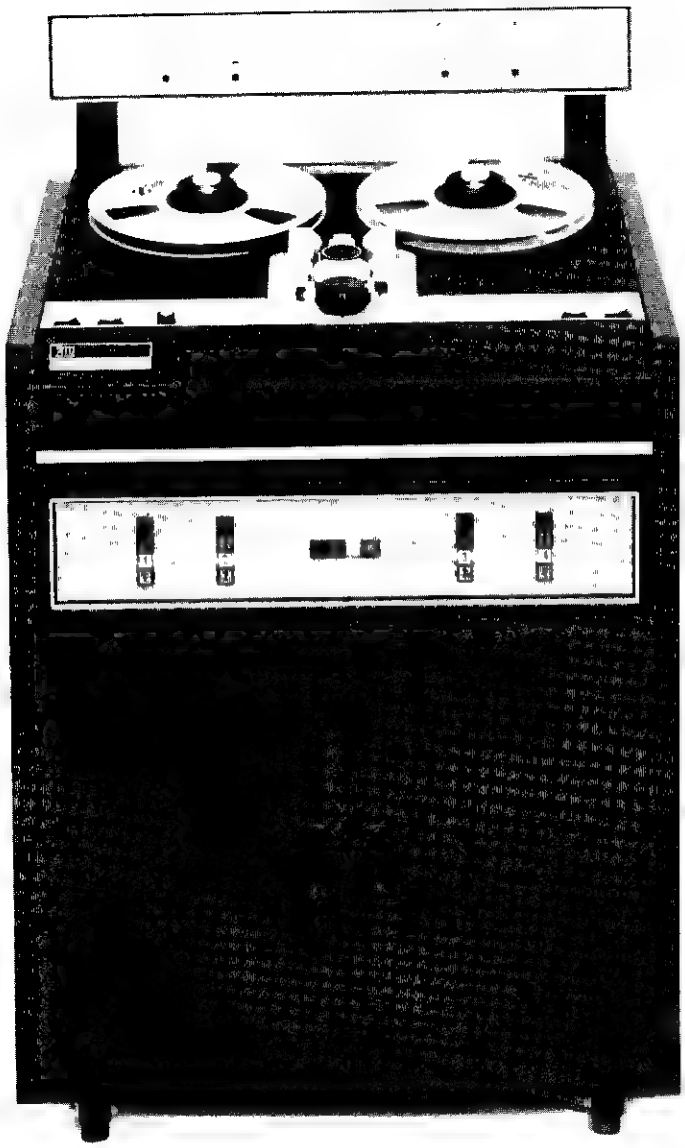

3224

Figure 1-2. Series 79 Recorder (4 Track)

Table 1-1. List of Components

COMPONENT	DESCRIPTION
Tape Transport 79013A400	Consists of basic transport less head assemblies, tape guides, and reel drive motors.
Tape Transport Drive 79013A100	Drive assembly for 2 inch and 1 inch tape.
Tape Transport Drive 79013A200	Drive assembly for 1/2 inch and 1/4 inch tape.
Capstan Assembly 79011C000 or 79011C100	Capstan assembly for all transports.
Capstan Servo PCB Assembly E79011C020	Contains the circuitry to drive and control the capstan motor.
Reel Drive Motor Assembly E79013A030	Contains the power amplifiers to drive the reel motors.
Signal Electronics PC Board E79059F010	One printed circuit board for each channel. Contains the line amplifier, record amplifier, bias and erase amplifiers, cue (overdub) preamplifier, reproduce preamplifier, decoder, and logic to command record, reproduce, or cue.
Signal Electronics Housing 79104A100-200-300-400-500-600 and 800	Signal electronics housing for 24, 16, 8, 4, 2, and 1 track recorders, respectively.
Signal Electronics Termination Board E79000A045	One board for 8 channels. Contains input connectors, output transformers, output connectors, and output termination resistors and switches, VU meter resistors, and input transformers, if used.
Logic and Master Bias Oscillator E79013D010	Contains transport and electronic logic circuitry, the 234 kHz Master Bias Oscillator, and four relays (edit, capstan brake, cutout, and fail-safe). Edit relay on 1, 2, and 4 track recorders only.
Extender Board 79059A012	Used as an aid in troubleshooting the signal electronics board. Allows circuit board to operate in an extended position providing access to both sides of the board.
Meter Panel Assembly 79038B100 (24 Track) 79038B200 (16 Track) 79038B300 (8 Track) 79038B400 (4 Track) 79038B500 (2 Track) 79038B600 (1 Track)	Consists of 1, 2, 4, 8, 16, or 24 VU meters panel mounted with interconnecting cable and connectors.
Remote Control Assembly 79017A300 (24 Track) 79017A200 (16 Track) 79017A100 (8 Track)	Consists of a control box with a cable and connector containing controls and indicators appropriate for providing remote control of either an 8, 16, or 24 track recorder.
Power Supply Assembly 79031A001-1, 79031A001-2	Consists of a dual dc regulated power supply. Outputs are +28, +17, and +15 volts.
Heads, Magnetic 79119A100 79119A200 79119A300 79119A400 79119A500 79119A600	 2 inch, 24 channel, record/reproduce. 2 inch, 16 channel, record/reproduce. 1 inch, 8 channel, record/reproduce. 1/2 inch, 4 channel, record/reproduce. 1/4 inch, 2 channel, record/reproduce. 1/4 inch, 1 channel, record/reproduce.

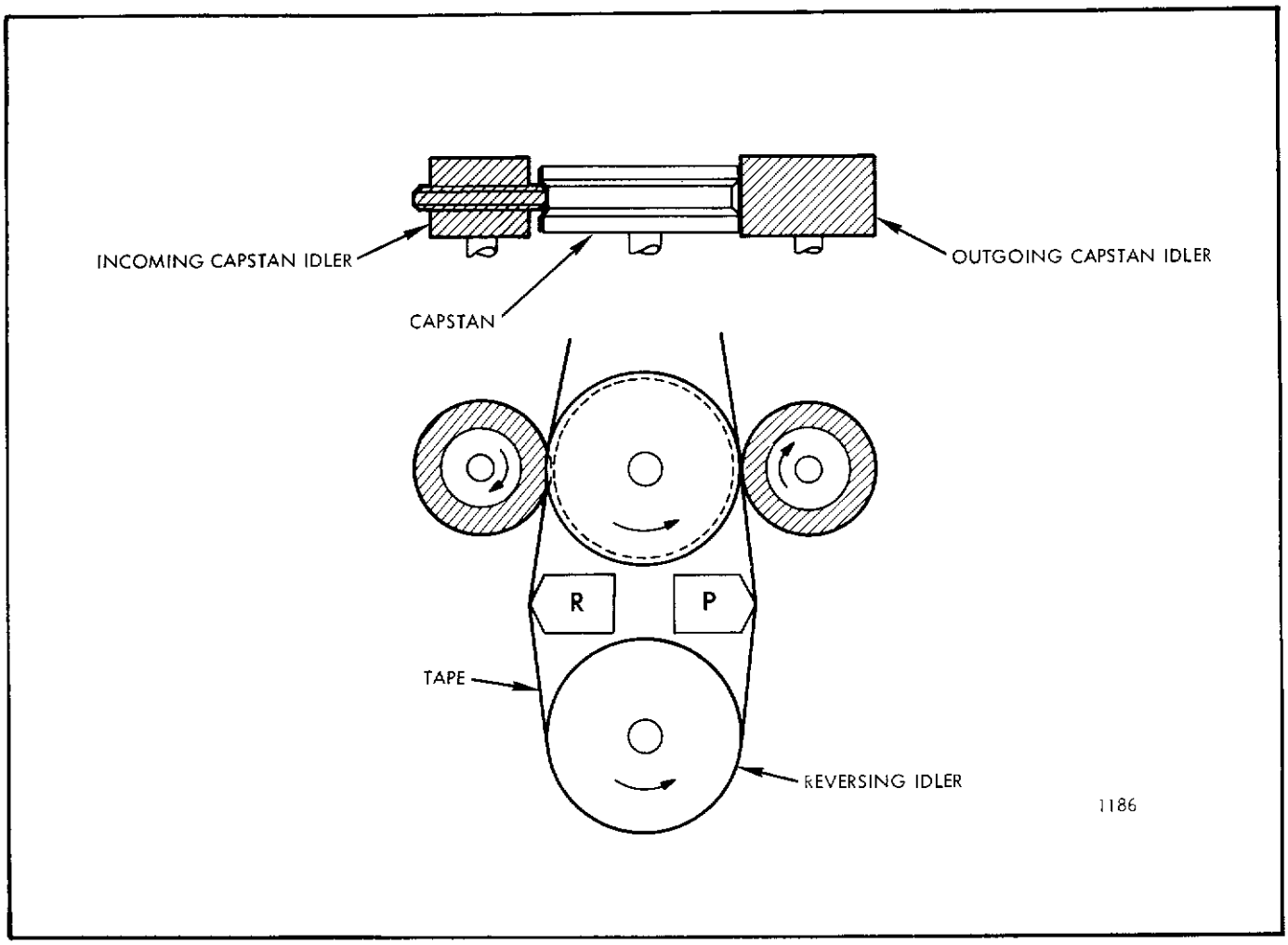

Figure 1-3. Isoloop Tape Drive

the "ridges" (of the larger diameter) of the capstan. The differential of capstan diameters constantly tries to extract more tape than is being fed into the loop and creates the necessary tension due to the slight elasticity of the tape. The tape tension is always kept safely within the elastic limits of the tape.

1-10. SIGNAL ELECTRONICS ASSEMBLY. The signal electronics assembly located below the tape transport (see figure 1-4) consists of one row of signal electronics printed circuit plug-in boards. The row may contain 1, 2, 4, 8, 16, or 24 pc boards corresponding to the number of tracks in a particular recorder. The assembly is accessible through two doors on the front of the console, allowing access to all of the circuit boards, adjustments, and control components. The input and output signal connectors, function control input connector, meter monitoring output connector, and input (dc) power connector are located on the rear of the signal electronics assembly which are accessible from the rear of the console.

1-11. DISPLAY PANEL. The display panel contains 1, 2, 4, 8, 16, or 24 VU meters corresponding to 1, 2, 4, 8, 16, or 24 tracks. Each meter is numbered for channel identification. The 24 track recorder is shown in figure 1-1 containing meters (channel 1 through 24).

1-12. REMOTE CONTROL ASSEMBLY. The remote control assembly (used in 8, 16, or 24 track recorders only) is divided into two groups of controls and indicators. See figure 1-5. The right-hand group of backlighted pushbutton control switches (STOP, PLAY, RECORD, REWIND, and FORWARD) are common to the tape motion controls on the transport and provide identical control at a remote location when desired. Four master signal electronics

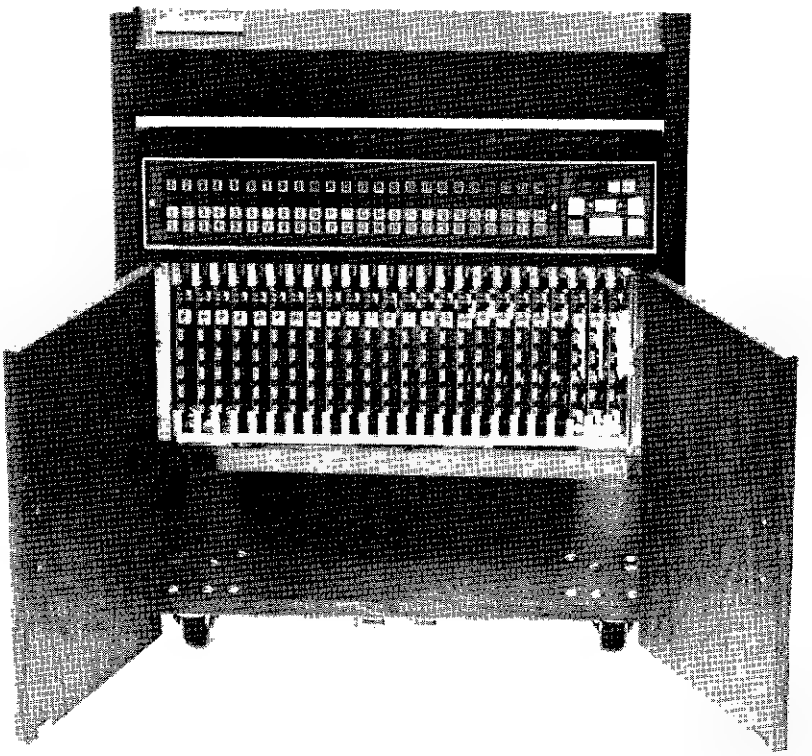

3039

Figure 1-4. Signal Electronics Assembly

pushbutton switches (common to the remote control only) are also included in this group that provide control of RECORD, CUE, and monitor functions IN or OUT of all channels. The RECORD and CUE pushbuttons are backlighted. The IN pushbutton contains a RUNOUT indicator, and the OUT pushbutton contains a RECORD indicator. The left-hand group of switches are common to the remote control only, and allow the mode of operation of each channel to be preselected to fit the need of any particular technique of recording desired. The preselection is accomplished by 32, 64, or 96 backlighted pushbutton switches which select four modes of operation (record-cue-in-out) for each channel. The switches are arranged in four rows of red, green, white, and amber. The rows are numbered sequentially 1 through the number of channels contained in a recorder. The function of each is as follows: red for RECORD, green for CUE, white for IN, and amber for OUT.

1-13. The 1, 2, and 4 track recorders (see figure 1-2) contain RECORD, CUE, IN, and OUT master control pushbuttons, and one, two, or four sets of red, green, white, and amber switches corresponding to RECORD, CUE, IN, and OUT. The controls cannot be removed and operated remotely as in the 8, 16, and 24 track recorders.

1-14. **POWER SUPPLY.** The record/reproduce electronics and associated control circuits are energized by a common solid-state regulated power supply fastened to the floor of the console.

1-15. OPTIONAL ACCESSORIES

1-16. Optional accessories are listed in the following paragraphs.

1-17. **3M BRAND SELECTAKE.** The Selectake provides illuminated readouts to indicate tape position and a search system to automatically locate a preselected position on a tape.

1-18. **3M BRAND SERIES 79 SYNCHRONIZER/READER.** The 3M Brand Synchronizer/Reader synchronizes audio program material on a multitrack audio tape to video program material played back from a video recorder.

1-19. **CONVERSION KITS.** The conversion kits contain tape guides, VU meters, heads (record, reproduce, and erase), signal electronics pc boards, mother boards, and termination boards to convert from 8 to 16 track, 8 to 24 track, or 16 to 24 track.

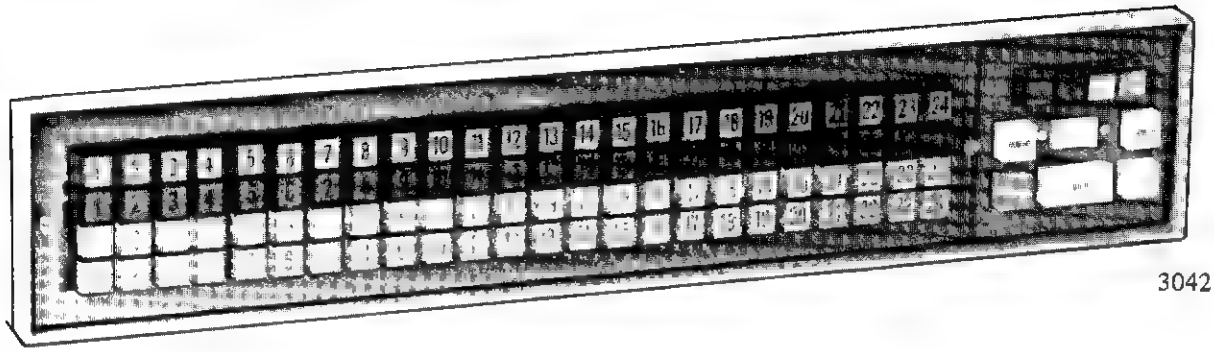

Figure 1-5. Remote Control Assembly

1-20. **INPUT TRANSFORMERS.** The recorder input impedance is 2.5K ohms without the transformers. With transformers, input impedance is 20K ohms.

1-21. **3M BRAND SMPTE CODE GENERATOR.** The Code Generator generates 80 bit SMPTE edit code.

1-22. **TRANSPORT REMOTE CONTROL.** The transport remote control contains a tape RUNOUT indicator, the PLAY, RECORD, FORWARD, REWIND, STOP, pushbutton switches, and a tape lifter switch. Available for 2 and 4 track recorders.

1-23. **RACK MOUNT ADAPTER.** The adapter is used to mount the 3M Brand Series 79 Synchronizer/Reader into a 19 inch RETMA rack mount.

1-24. SPECIFICATIONS

1-25. Specifications for the 3M Brand Series 79 Recorder are presented at the end of this section. These specifications are based upon operation and maintenance in accordance with the procedures and conditions presented in this manual. Deviation from these procedures, use of other than recommended magnetic tapes, or modification of the equipment may result in degradation of the equipment performance. These specifications are subject to change without notice.

performance specifications

1, 2, OR 4 CHANNELS

NAB-CCIR-NEW 30 IPS CHARACTERISTIC

The electronics can be set up for all NAB, all CCIR or combination: NAB at low speed, machine will automatically switch to CCIR or new 30 ips 17.5μs characteristic at high speed. Terminals can be linked on the electronics boards to obtain required function.

Number of Channels: 1, 2, or 4.

SIGNAL-TO-NOISE RATIO: *1, 2, and 4 channel models.

	Standby	Biased Tape
Normal	68 dB	64 dB
Sync	68 dB	64 dB
1 Channel Model	70 dB	66 dB

*Referenced to 3% maximum third harmonic distortion level at 700 Hz, using 3M 206 or 207 tape.

EQUALIZATION: Machines are normally equalized for NAB 15 ips and 17.5μs 30 ips. Equalizers automatically switch electronically when tape speed is changed

CAPSTAN DRIVE: DC servo control with following switched selection: Lo, Hi, and External. External control is available from a single variable resistor or voltage source. Fixed speeds, 7.5 and 15, or 15 and 30 ips by plug-in selector.

REEL DRIVE: Contains solid state power switching with three rate response modes. Nominal winding velocity 300 ips. Maximum capacity 10-1/2 inch reel, NAB hub, or 7 inch plastic reel.

FREQUENCY RESPONSE:

IPS	Mode	Limit
7.5	reproduce	±2 dB 40 Hz - 12 kHz
7.5	rec/repro	±2 dB 40 Hz - 12 kHz
15	reproduce	+1 dB −2 dB 50 Hz - 15 kHz
15	rec/repro	+1 dB −2 dB 50 Hz - 15 kHz
30	reproduce	+1 dB −2 dB 50 Hz - 15 kHz
30	rec/repro	+1 dB −2 dB 50 Hz - 15 kHz

Sync response same as normal reproduce (separate equalizers and amplifier).

PHASING: On all channels, input to output polarity is maintained. 1 mil wavelength error is less than 90° between any two tracks.

CHANNEL SEPARATION: Better than 50 dB at 500 Hz 2 and 4 tracks.

ELECTRONICS INPUT: 2.5K ohms single ended input. (Input transformers optional.)

ELECTRONICS OUTPUT: +4 dBm reference level into 600 ohm load, termination switches provided. +24 dBm maximum distortion 1% total.

BIAS AND ERASE OSCILLATOR: Master oscillator on tape transport supplies 234 kHz low impedance bus feeding individual bias and erase power amplifiers for each channel.

DEGREE OF ERASURE: A 1 kHz signal at 3% distortion level is reduced 75 dB or more by erase head.

POWER INPUT: 105 to 125 or 210 to 250 volts, ac 50 or 60 Hz. All power to machine is electronically regulated within the power supply unit.

1 track unit 300 VA maximum
2 track unit 325 VA maximum
4 track unit 350 VA maximum

MECHANICAL:

Weight:	200 lbs (4 trk)
Height:	46 inches
Width:	27 inches
Depth:	23-1/2 inches

FLUTTER PERFORMANCE:

NAB Unweighted

IPS	Flutter Band (Hz)	Max RMS Flutter
30	0.5 - 200	.06%
15	0.5 - 200	.06%
7-1/2	0.5 - 200	.08%

DIN Weighted ±Peak %

30	0.04 Maximum
15	0.04 Maximum
7-1/2	0.05 Maximum

NOTE: All measurements of flutter made by recording a tone on machine under test, rewinding and measuring flutter on replay. Flutter measurement is maximum cumulative.

TIMING ACCURACY: ±0.1%

START TIME: Less than 0.5 second to reach PLAY speed.

STOP TIME: Less than 0.5 second from PLAY mode. Less than 4.0 seconds from FAST FWD or RWD.

REWIND TIME: Less than 1.5 minutes for 2,500 feet.

SERIES 79
PERFORMANCE SPECIFICATIONS

8, 16, or 24 CHANNELS

NAB-CCIR-AES 30 IPS CHARACTERISTIC

The electronics can be setup for all NAB, all CCIR or combination: NAB at low speed, machine will automatically switch to CCIR or new 30 ips 17.5μs characteristic at high speed. Terminals can be linked on the electronics boards to obtain required function.

Number of Channels: 8, 16, or 24.

SIGNAL-TO-NOISE RATIO: 8 and 16 channel models.

	Standby	Biased Tape
Normal	68 dB	64 dB
Sync	68 dB	64 dB

70 mil track width 20 Hz - 20 kHz bandwidth, with reference to 3% maximum third harmonic distortion level at 700 Hz, using 3M 206 or 207 tape.

For the 24 track model, SNR figures are 64 dB and 60 dB respectively (in the normal mode).

EQUALIZATION: Machines are normally equalized for NAB 15 ips and 17.5μs 30 ips. Equalizers automatically switch electronically when tape speed is changed. When variable speed is used, LO or HI equalizers may be selected.

CAPSTAN DRIVE: Dc servo control with following switched selection: VAR LO, VAR HI, LO, HI, and EXTERNAL. A local control is provided to vary the speed from 5 - 45 ips. External control is available from a single variable resistor or voltage source. Fixed speeds, 7.5 and 15, or 15 and 30 ips by plug-in selector.

REEL DRIVE: Contains solid state power switching with three rate response modes. Nominal winding velocity 300 ips. Maximum capacity 10-1/2 inch reel, NAB hub.

FREQUENCY RESPONSE:

IPS	Mode	Limit	
7.5	reproduce	±2 dB	40 Hz - 12 kHz
7.5	rec/repro	±2 dB	40 Hz - 12 kHz
15	reproduce	+1 dB −2 dB	50 Hz - 15 kHz
15	rec/repro	+1 dB −2 dB	50 Hz - 15 kHz
30	reproduce	+1 dB −2 dB	50 Hz - 15 kHz
30	rec/repro	+1 dB −2 dB	50 Hz - 15 kHz

Sync response same as normal reproduce (separate equalizers and amplifier).

PHASING: On all channels, input to output polarity is maintained. 1 mil wavelength error is less than 90° between a center track and any other track.

CHANNEL SEPARATION: Better than 55 dB at 500 Hz for 8 and 16 track machines. Better than 50 dB for 24 track machines.

ELECTRONICS INPUT: 2.5K ohms single ended input.

ELECTRONICS OUTPUT: +4 dBm reference level into 600 ohm load, termination switches provided. +26 dBm maximum output.

BIAS AND ERASE OSCILLATOR: Master oscillator on tape transport supplies 234 kHz low impedance bus feeding individual bias and erase power amplifiers for each channel.

DEGREE OF ERASURE: A 1 kHz signal at 3% distortion level is reduced 75 dB or more by erase head.

POWER INPUT: 105 to 125 or 210 to 250 volts, ac 50 or 60 Hz. All power to machine is electronically regulated within the power supply unit.

8 track unit	400 VA maximum
16 track unit	450 VA maximum
24 track unit	500 VA maximum

MECHANICAL:

Weight:	300 lbs. (24 trk)
Height:	8 trk 46", 16 trk 50 1/2", 24 trk 55"
Width:	27 inches
Depth:	23 1/2 inches

FLUTTER PERFORMANCE:

NAB UNWEIGHTED

IPS	Flutter Band (Hz)	Max RMS Flutter
30	0.5-200	0.06%
15	0.5-200	0.06%
7 1/2	0.5-200	0.08%

DIN WEIGHTED ± PEAK %:

IPS	
30	0.04 Maximum
15	0.04 Maximum
7 1/2	0.05 Maximum

NOTE: All measurements of flutter made by recording a tone on machine under test, rewinding and measuring flutter on replay. Flutter measurement is maximum cumulative.

TIMING ACCURACY: ±0.2%

REMOTE CONTROL: A control unit is provided and provides full control for all functions excepting speed selection. Positive indication of erase current flow is provided for each channel.

START TIME: Less than 0.5 second to reach PLAY speed.

STOP TIME: Less than 0.5 second from PLAY mode. Less than 4.0 seconds from FAST FWD or RWD.

REWIND TIME: Less than 1.5 minutes for 2,500 feet.

OPTIONAL EXTRAS:

A Selectake Counter Locator unit can be supplied.

Input transformers yielding a 20K ohm, fully floating, or unbalanced line. -6 to +16 dBm range on 600 ohm bus.

SECTION II
INSTALLATION

2-1. RECEIPT INSPECTION

2-2. The 3M Brand Series 79 Recorder was inspected, completely checked out, and adjusted before leaving the factory. Immediately upon receipt, inspect the equipment for any shipping damage. If any damage is noticed, notify the carrier immediately. If everything is normal, proceed with the installation.

2-3. LOCATION CONSIDERATIONS

2-4. The tape recorder can be installed in almost any location as long as reasonable air flow is used. The recorder should not be installed in an extremely dusty or damp location. Strong magnetic fields should be avoided, such as from power transformers and tape degaussers. Dimensions of the console for 24 track are given in figure 2-1. For other recorders, the difference in height of 4.38 inches is for each meter panel.

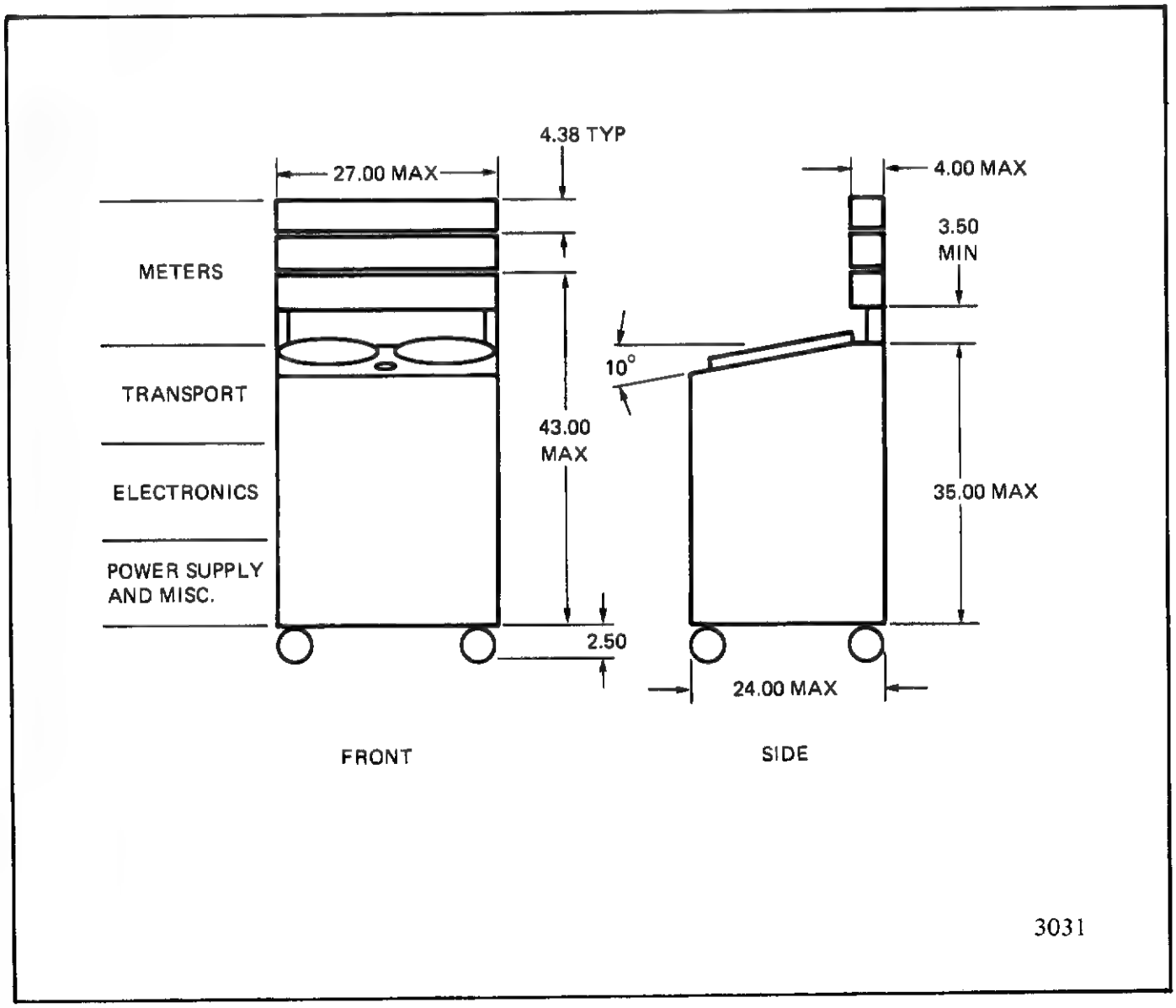

Figure 2-1. Outline Dimensions

2-5. INITIAL SETUP

2-6. When the console is uncrated, the following steps should be taken to prepare the recorder for operation.

1. Connect the input and output signal lines to their proper jacks, as marked on the rear of the signal electronics assembly. Type XL3 wire standard audio plugs (not supplied) are required for both input and output connections. See figure 2-2 for plug wiring details.

2. The termination slide switches, located above the output jacks, should be placed in either the up position (600 ohm termination), or the down position (unterminated), depending on the termination required. The outputs should be terminated internally or externally at all times.

3. Inspect all connectors on the rear of the signal electronics assembly and underside of the tape transport to ensure that all are properly engaged.

4. Open the doors on the front of the console; inspect each circuit board within the electronics assembly to ensure that all are properly engaged.

5. Rotate by hand the reversing idler, capstan, take-up reel hub, and the supply reel hub. There should be no binding; each should turn freely and smoothly with very little torque applied.

6. Connect the 3 conductor power cord, (connected to the power supply) to a 115 volt, 60 Hz power source.

NOTE

230 volt, 50 Hz power can be applied by changing the ac input terminals of the power supply.

7. The remote control assembly can be removed from the console and relocated up to 30 feet away from the recorder. Install the blank panel in place of the remote control assembly.

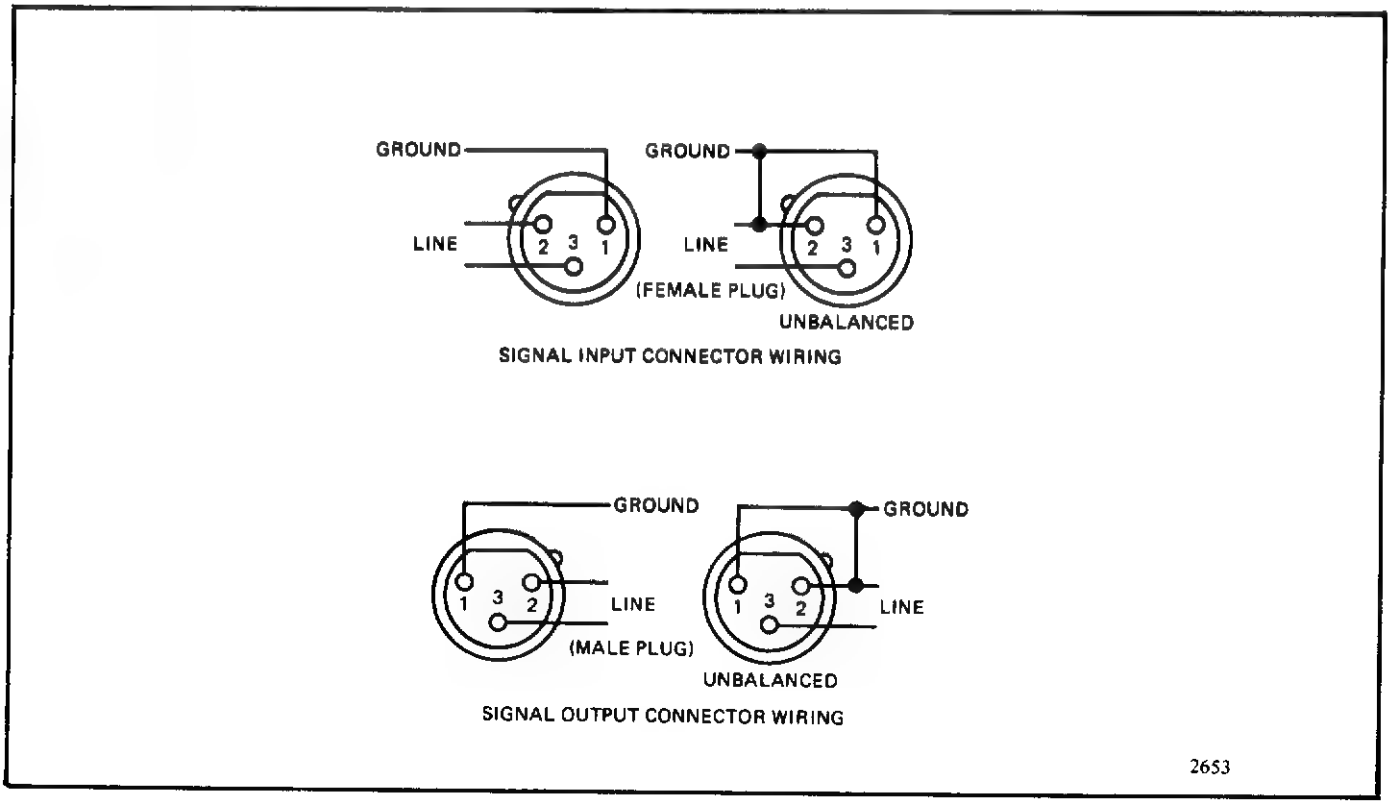

Figure 2-2. Input/Output Connector Wiring

SECTION III
OPERATION

3-1. GENERAL

3-2. The 3M Brand Series 79 Recorder may be operated at the console, or up to 30 feet from the console using the remote control assembly provided with the 8,16, and 24 track recorders. The tape motion controls are conveniently grouped on the tape transport and remote control assembly so as to provide a minimum of movement by the operator. If the optional remote transport control is used with 1,2, and 4 track recorders, the tape motion controls operate the same as in the 8,16, and 24 track remote control. All controls and indicators are identified in figures 3-1 and 3-2 with a complete description of each control function tabulated in table 3-1. A study of Section V, Technical Description, is useful for understanding the operation of the controls.

NOTE

For consistently good recordings, the heads, guides, reversing idler, and capstan should be cleaned frequently to remove dust and oxide deposits. The heads should also be degaussed for optimum performance with the power switched off.

3-3. TAPE THREADING

3-4. Threading the recorder is extremely simple, as there are no compliance arms or other mechanical devices in the tape path. Also, there is no tension on the tape until the tape breaks the light path of the photoelectric circuit in the Isoloop assembly and the STOP button is pressed. The use of Scotch Brand Dynarange recording tape, Type 206 or 207, is recommended, although adjustable bias and equalization permits accommodation of a wide range of tape characteristics. To thread the tape, refer to figure 3-3 and proceed as follows:

1. Set the CAPSTAN SPEED switch to HIGH, LOW, VAR, or EXT as desired.

2. Set the TAPE TENSION switch to the HIGH position when using 2 inch tape, or the LOW position when using 1 inch, 1/2 inch, or 1/4 inch tape. LOW is also used if thin tape or small reels are being used.

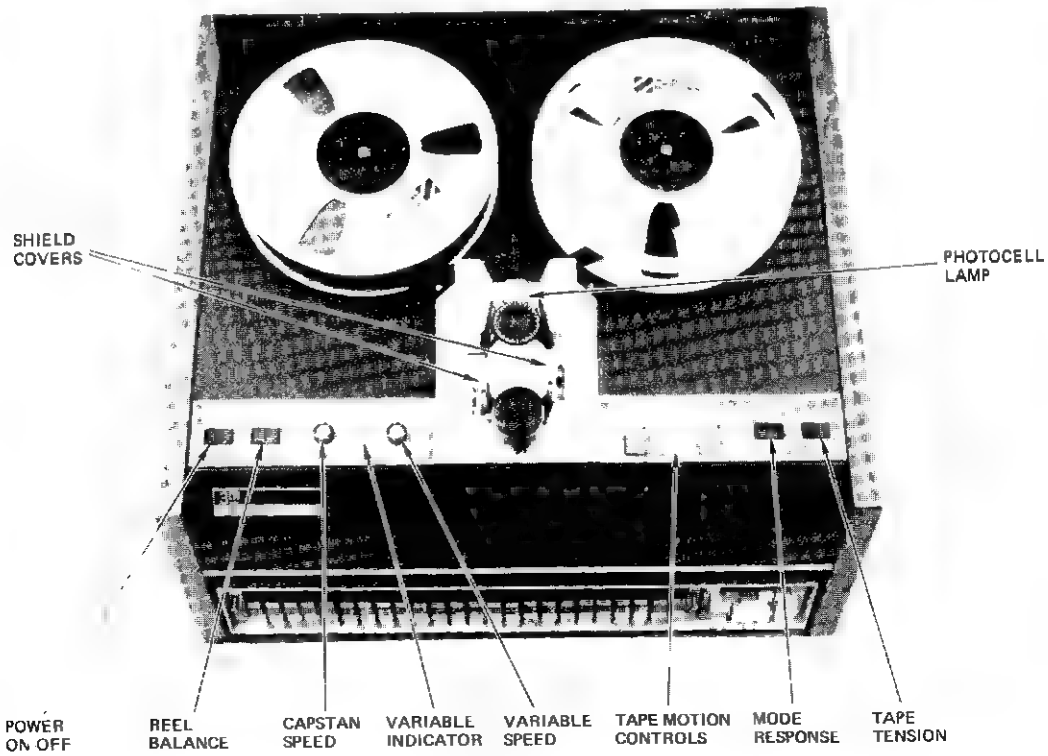

Figure 3-1. Operating Controls

3037

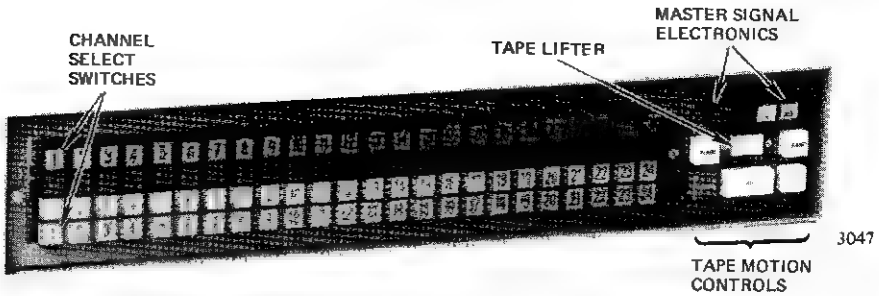

Figure 3-2. Remote Control Assembly

Table 3-1. Operating Controls and Indicators

CONTROL/INDICATOR	FUNCTION
	TAPE TRANSPORT
POWER OFF-ON	Controls ac power to the tape transport and the signal electronics assembly. Press to ON to energize. Power on is indicated by illumination of the VU meter lamps and the end-of-tape sensor lamp; the head shield covers also open.
REEL BALANCE	A three position switch compensates the reel drive motor drivers for difference in reel inertia such as 7 inch reels on one side and 10 inch reels on the other side, and beginning versus end of reel. Normal position is the center position. With a small reel on the right, press the switch RIGHT. With a small reel on the left, press the switch LEFT.
CAPSTAN SPEED	A five position rotary switch selects capstan speed. (3 position for 1, 2, and 4 track recorders.)
VAR LOW VAR HI	The tape speed can be varied between 5 and 45 ips by rotating the VARIABLE SPEED control. A VARIABLE INDICATOR lights when the switch is set to VAR LOW or VAR HI. Low speed equalizer is selected in the LOW position, high speed equalizers in the HI position. A master recording would not normally be made if this indicator is lighted.
LOW	Selects the lower of two fixed tape speeds (7-1/2 or 15 ips), and the corresponding equalizers.
HIGH	Selects the higher of two fixed tape speeds (15 or 30) and the corresponding equalizers.
EXT	Selects an external input plugged into remote connector J3. The input may be a variable resistor, a voltage source, or a synchronizer input.

Table 3-1. Operating Controls and Indicators (Cont.)

CONTROL/INDICATOR	FUNCTION
TAPE TRANSPORT (Cont.)	
	NOTE
The pushbutton switches that backlight when pressed, extinguish when another backlighted pushbutton is pressed.	
STOP	Backlights when pressed to place the transport in a standby condition. Stops tape motion from any mode of operation. The switch must be pressed and backlighted to reset after any occurrence of tape runout or power interruption.
PLAY	Backlights when pressed and tape moves at the selected speed. Pressed to reproduce or record.
RECORD	Backlights when pressed simultaneously with the PLAY pushbutton. The record mode is initiated if the remote control master signal electronics RECORD pushbutton is pressed. (Record can also be initiated by the remote control RECORD pushbutton.)
FORWARD	Backlights when pressed, and moves the tape at a rapid speed onto the take-up reel.
REWIND	Backlights when pressed, and rewinds the tape at a rapid speed onto the supply reel.
MUTE DEFEAT *	Allows audible signal in fast forward or rewind when switch is pressed to on and backlights. Press for off.
EDIT *	Backlights when pressed, and disables the take-up reel so that tape can be spilled. Press for on, press for off switch. This mode can only be initiated from STOP or PLAY.
MODE RESPONSE	A three position switch affects the reeling velocity rate of change when changing from one reeling mode to another, or changing from a reeling mode to a stop or play mode.
1	Fast or maximum rate of change permitted by the transport.
2	Fast except for a period of time immediately following a change from FORWARD to REWIND or REWIND to FORWARD.
3	Slow rate of change.

*The EDIT switch is used in the 1,2, and 4 track recorders instead of MUTE DEFEAT which is used in 8, 16, and 24 track recorders.

Table 3-1. Operating Controls and Indicators (Cont.)

CONTROL/INDICATOR	FUNCTION
TAPE TRANSPORT (Cont.)	
TAPE TENSION	A two position switch affects the reel motor torque, and by making internal adjustments, may be used to accommodate difference in tape width, tape thickness, or reel size.
HIGH	Normally used for widest or thickest tape, and large reel size.
LOW	Normally used for narrowest or thinnest tape, and smaller reel size.
REMOTE CONTROL ASSEMBLY (Mode Control Pushbuttons & Tape Lifter)	
NOTE Remote Control Assembly is used in 8, 16, and 24 track recorders.	
STOP, PLAY, RECORD, FORWARD, REWIND	Same as the transport switches except the STOP switch will not reset the logic to standby after a fail-safe condition.
Tape Lifter (Unlabeled)	The unlabeled switch located above the STOP pushbutton is a three position momentary switch normally set to the center (off) position. In forward or rewind, when pressed to the right, the tape lifter solenoid is defeated which allows the tape to be monitored during the spooling modes. See note under paragraph 5-48.
REMOTE CONTROL (Master Signal Electronics)	
NOTE 1, 2, and 4 track recorder Master Signal Electronics switches are not remote, but are located in the center of the control panel as shown in figure 1-2.	
RECORD (Red)	Backlights when pressed, and allows the record command to be transferred to the individual channel record switch when received from the transport or remote RECORD button.
CUE (Green)	Lights to indicate the command to cue (overdub) playback is being presented to the individual channel function switch. The cue lamp lights when the CUE switch is pressed in play or stop and when the master signal electronics RECORD switch is lighted.
IN (White)	When pressed, will command all channels to monitor the record input signals unless the OUT switch is pressed. A RUNOUT indicator (unassociated with the IN function) is displayed in the switch assembly.
RUNOUT	The RUNOUT indicator lights when tape runs out or breaks, or if tape is not threaded.

Table 3-1. Operating Controls and Indicators (Cont.)

CONTROL/INDICATOR	FUNCTION
REMOTE CONTROL (Master Signal Electronics (Cont.)	
OUT (Amber)	When pressed, overrides the IN button and will command all channels to monitor the playback output signals. A RECORD indicator (unassociated with the OUT function) is displayed in the switch assembly.
RECORD	The RECORD indicator lights when one or more of the individual channel red record switches are pressed to show a record ready condition. The lamp goes out when the master record switch is lighted. This indicates a normal record condition exists. If a malfunction occurs in one or more channels, the indicator will flash on and off and recording should not proceed.
REMOTE CONTROL (Function Switch Assembly)	
	NOTE The function switch assembly is not removable in 1, 2, and four track recorders. Each track contains four switches numbered by channel. The red, green, white, and amber functions correspond to the red, green, white, and amber switches of the master signal electronics switches.
Record, Red (1 through 8, 16, or 24)	When pressed, will route the record command to the appropriate signal electronics channel if the master signal electronics RECORD and transport RECORD switches have been pressed. Record ready is indicated by one half intensity of the indicator (alternating between one half and full intensity of the indicator if wired in some systems). Normal record is indicated by full intensity illumination. A malfunction is indicated by a flashing of the indicator for that selected channel.
Cue, Green (1 through 8, 16, or 24)	When depressed and illuminated at full intensity, a cue (overdub) condition exists on that channel. One half intensity illumination indicates that the switch has been pressed but cue has not been activated.
In, White (1 through 8, 16, or 24)	When pressed and illuminated, but not locked to detent, indicates that that particular channel record input is monitored. When locked in detent position, the channel is locked to record input.
Out, Amber (1 through 8, 16, or 24)	When pressed and illuminated, but not locked to detent, indicates that that particular channel is monitored. When locked, the channel is locked to the playback output.
	NOTE Master IN (white) and OUT (amber) override individual white or amber. If the master IN or OUT, or none of the white or amber are pressed, the channels will automatically transfer to white when recording and to amber when playing back.

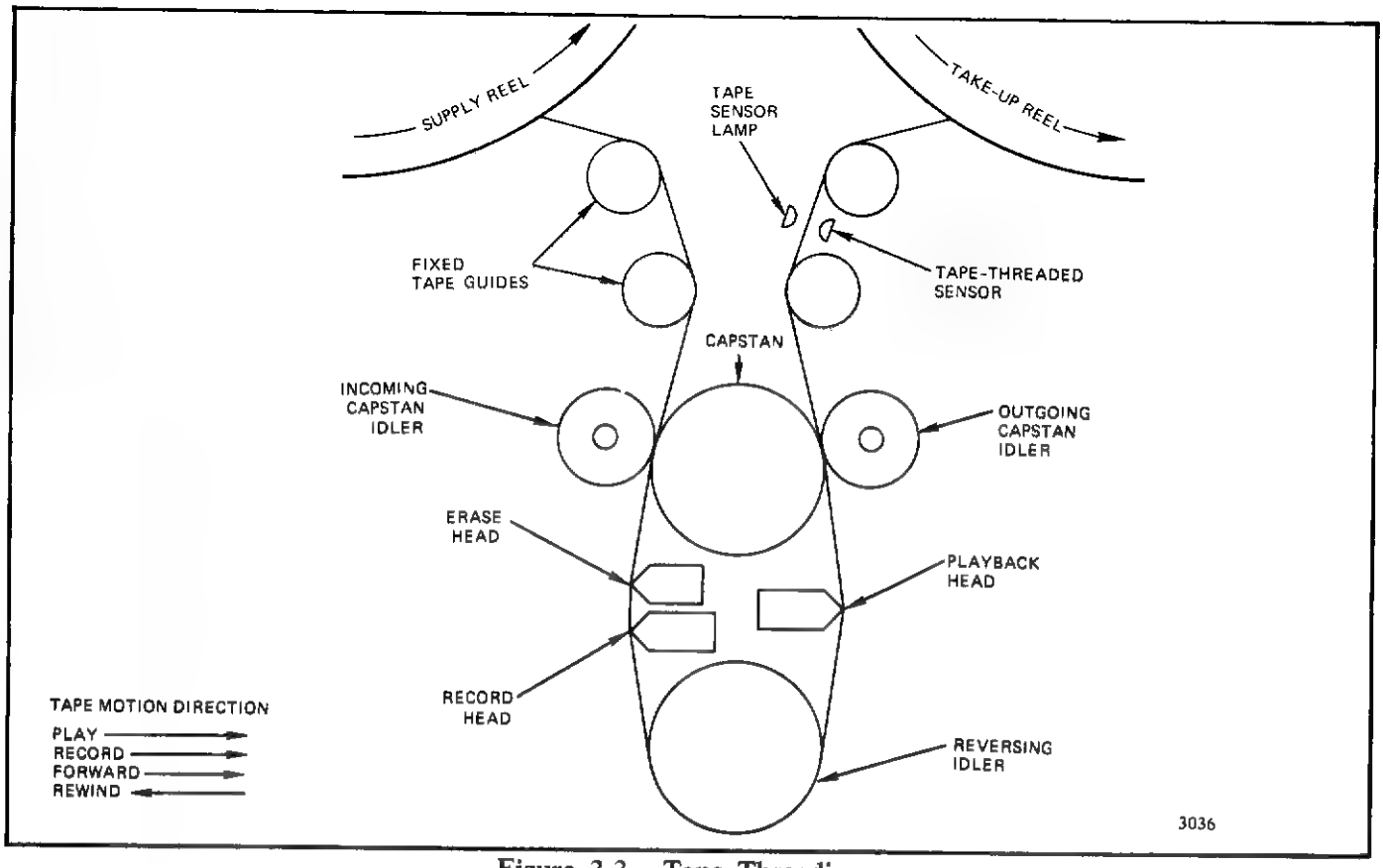

Figure 3-3. Tape Threading

3. Press the POWER to ON. The panel meters lamps light, the tape sensor lamp lights, and the head shield covers open. (Normally, the numbered amber buttons of the remote control will be illuminated. If the white buttons are illuminated, press any amber button and the amber buttons will light.)

4. Place a reel of tape on the left-hand spindle in such a manner that the reel rotates counterclockwise when tape is unwound. Unwind about two feet of tape from the supply reel and drop the tape on the inside of the incoming tape guides, between the capstan idler and the capstan, past the erase and record head, around the reversing idler, past the play head, between the right-hand capstan idler and the capstan, past the outgoing tape guides on to the take-up reel. Thread the tape on the take-up reel hub so that the tape will wind in a counterclockwise direction. As the tape breaks the photoelectric light path at the exiting tape guides, a click can be heard which is the cut out relay deenergizing.

5. Press the STOP button to apply torque to the reel motors which takes up any slack in the tape threaded through the Isoloop, the STOP button should also illuminate at this time indicating that the transport is in standby and ready to operate.

3-5. TRANSPORT TAPE MOTION OPERATION

3-6. Upon initial operation of the transport, observe each mode of operation to gain familiarity with the mechanical actions of the transport as follows:

NOTE

Either the transport or remote control buttons (STOP, PLAY, RECORD, FORWARD, or REWIND) can be used to control tape motion.

1. Press the POWER to ON. The panel meters lamps light, the tape sensor lamp lights, and the head shield covers open.

2. Set the CAPSTAN SPEED, REEL BALANCE, TAPE TENSION, and MODE RESPONSE switches to the desired positions.

3. With tape threaded, press the transport STOP button to light the stop lamp.

NOTE

The tape motion controls may be pressed in any sequence at any time with complete safety to the tape and transport. When the transport is operating in the forward or rewind modes, tape motion has to be stopped before RECORD is initiated at the transport or remote control.

4. Press the PLAY button. Observe that the capstan starts, the head shield covers close, the capstan idlers pull in, and tape starts to move in the forward direction of the selected speed.

5. Press the STOP button. Observe that the capstan idlers release tape tension, the capstan stops, the head shield cover drops back, and the tape comes to a smooth stop.

6. Simultaneously press the PLAY and RECORD buttons. Observe that the PLAY and RECORD buttons both illuminate and that the transport mechanical functions are the same as in step 3. Press the STOP button and allow the tape to stop.

7. Press the FORWARD button. Observe that the tape lifters lift the tape away from the heads, the head shield covers remain open, and the tape rapidly accelerates in the forward direction.

8. Press the STOP button. The tape motion will come to a smooth rapid stop, and the tape lifters will drop back.

9. Press the REWIND button. Observe that the transport mechanical functions are the same as step 7 except the motion will be in the rewind direction.

10. Press the STOP button and allow the tape to stop as in step 8.

11. Observe that in standby (STOP button illuminated), the head shield covers will remain open or closed when operated manually. Note that the head shield covers, if closed in the standby mode, will open when the tape is lifted from the running path between the right-hand tape guides.

3-7. MONITORING

3-8. Signals that are to be recorded or reproduced are monitored on the meter panel above the transport. External monitoring equipment can be connected to the output jacks at the rear of the electronics assembly. Master switches IN and OUT and individual numbered channel white and amber pushbutton switches control the input and output signals, respectively.

3-9. IN/OUT MONITOR SWITCHING. The IN and OUT pushbutton switches are located on the remote control assembly. Pushbuttons IN (white) and OUT (amber) provide simultaneous switching of the output and meter monitoring circuits of all channels to either the input signal being recorded on the reproduced signal from the recorded tape. Monitoring is automatic if none of the switches are pressed. The IN button selects the record input signal, the OUT button the reproduce output signal. Individual switching for each channel is provided by the numbered white and amber monitor select switches. The individual switches allow either the input (white) or output (amber) of any one channel to be selected independently of all other channels.

The individual channel white and amber switches are inoperative if either the master IN (white) or OUT (amber) switch is pressed, but the individual channels will indicate. Master OUT (amber) over-rides master IN (white) when pressed.

3-10. RECORDING

3-11. Recording requires the use of a RECORD pushbutton on the transport or a similar RECORD pushbutton on the remote control assembly. In addition, a master RECORD pushbutton on the remote control assembly along with a channel red pushbutton are required to select a channel or channels. To avoid confusion, the following will be indicated to identify the pushbuttons for the recording operation:

1. RECORD (t) (r) refers to the transport or remote RECORD pushbutton pressed simultaneously with the PLAY pushbutton to initiate record.

2. RECORD (m) refers to the master signal electronics RECORD pushbutton on the remote control assembly.

3. Red refers to the individual channel record pushbutton on the remote control assembly.

NOTE

Before preparing to record, the record level adjustment on each board should be set according to the maintenance section.

3-12. The following procedure is for a single recording channel. When multiple channel recording is desired, perform the same procedure for each channel.

1. Press the POWER switch to ON to apply power.

2. Thread a reel of tape through the Isoloop as previously described. For critical recording applications, new or previously degaussed tape should be used.

3. Set the CAPSTAN SPEED, REEL BALANCE, TAPE TENSION, and MODE RESPONSE switches to the desired positions.

4. Press transport STOP button for standby.

5. Press the master RECORD (m) button and the particular channel red button on the remote control assembly. The RECORD (m) is lit, the channel red button lamp is dimly lit, and the RECORD lamp in the OUT button lights when the channel red button is pressed.

6. To start recording, simultaneously press the PLAY and RECORD (t) (r) buttons on the transport or remote control. The OUT button RECORD lamp goes out, and the red channel lamp brightens.

NOTE

When the amber OUT button is pressed, all channels are monitored for output. When the white IN button is pressed, all channels are monitored for input. To monitor individual channels for combinations of IN and OUT, press only the individual channel white and amber buttons. If none of the buttons are pressed, monitoring is automatic for record input.

7. Press the amber OUT and amber channel select buttons; the playback signal monitored on the VU meter should be approximately the same level as the input signal being recorded. Alternately press the white IN and OUT buttons to ascertain that the input and output signals are at the same level. Listen critically on a good monitor speaker or headphone system to be certain the signals sound identical with the switch in both the IN and OUT positions.

8. To stop recording, press the STOP button. The tape will stop, the STOP and OUT (RECORD) buttons will light, the individual channel buttons dim.

3-13. REPRODUCE

3-14. When the recorder is used to reproduce prerecorded tape, the following procedure should be followed:

1. Press the STOP switch to light the stop lamp.

2. Check and assure that the master CUE and master RECORD (m) button is not pressed.

3. Press the OUT select button, or individual channel amber button.

4. Press the PLAY button to start the recorder in the reproduce mode of operation. The reproduce output level of the prerecorded tape monitored at the VU meter or output jack will represent the true amplitude level of the signal recorded on the tape.

NOTE

The amplitude level of the prerecorded tape is established by the calibrated adjustment of the reproduce level adjustment located on the reproduce preamplifier in the signal electronics. The adjustment should only be adjusted when performing the playback alignment adjustments covered in the maintenance section.

3-15. CUEING OR OVERDUBBING

3-16. Cueing or overdubbing provides a means of adding one or more audio tracks in synchronism with a first track or set of tracks previously recorded on the tape, and a means of patching tape. Cueing while in the record mode requires that the individual channel green cue button be pressed. The master CUE button can be in either position, but normally out. In play (reproduce) or stop, the cue command is initiated by pressing the master CUE button, and the individual channel green buttons. To disable the cue command, only the master CUE button need be pressed.

3-17. Consider a tape which has had an orchestra previously recorded on track no. 1 and a synchronized vocal is to be added to track no. 2, which has been left unrecorded. To accomplish the synchronized dubbed-in vocal recording on track no. 2, the following procedures should be followed:

1. Thread the prerecorded tape on the transport in the normal manner, and press transport STOP button for standby.

2. Press the master CUE button if the lamp is lighted to extinguish the lamp.

3. Press the channel no. 1 green button.

4. Press the channel no. 1 amber button.

5. Connect an appropriate headphone monitoring set to the output of channel no. 1.

6. Press the master RECORD (m) button and the channel no. 2 red button.

7. With the vocalist listening in the headphones, press the RECORD (t) (r) button. The orchestra previously recorded on track no. 1 will be heard in the phones, and the voice of the vocalist will be recorded on track no. 2 in synchronism with orchestra on track no. 1.

8. After an overdub selection has been recorded, the same tape can be replayed in the normal reproduce mode by pressing the PLAY button without resetting any switches. If a second recording attempt is necessary, starting the recorder in the record mode will again activate the previously selected cue and record tracks.

9. If it is desirable to listen to a prerecorded track for cueing purposes before the recorder is activated in the record mode, the master CUE switch should be pressed. Monitoring of the cue track will now be obtained in the play and stop mode. The master CUE switch should be pressed and released when the overdub recording is played back, otherwise the prerecorded track and the overdub track will not be in sync.

3-18. EDITING

NOTE

The editing procedure described below is used only on 1, 2, and 4 track recorders.

3-19. Editing tape is extremely fast, accurate, and easy utilizing the unique features of the recorder such as simplicity of the Isoloop drive, tape tension and release, and the safety interlocks which permit initiating the edit mode from play or stop modes only. The EDIT switch is also located on the transport for convenience. The take-up reel is inoperative in the edit mode as tape is automatically moved past the playback head. The operators hands are free to handle tape, stop tape motion, and precisely mark the tape for cutting.

3-20. To edit, perform the following:

1. Perform (a) if in PLAY, or (b) if in STOP.

   (a) If in the play mode, press the EDIT button. The EDIT button will light and after a short interval, the take-up reel will come to a complete stop. After stopping, the tape will be moved from the supply reel past the playback head and spill out.

   (b) If in the stop mode, press the EDIT switch to light the EDIT button. Then press the PLAY button. The tape will move from the supply reel past the playback head and spill out.

NOTE

For recorders equipped with variable speed. When tape is close to the cutting point, the CAPSTAN SPEED switch can be set to VAR LOW or HI and the VARIABLE SPEED control can be adjusted for a very slow speed.

2. When the cutting point has been found, press the STOP button.

3. Move the capstan manually to position the tape precisely to the cutting point.

4. After tape is spliced, set the CAPSTAN SPEED switch to the desired position and continue editing.

SECTION IV
MAINTENANCE

4-1. GENERAL

4-2. Maintenance is of prime importance for reliability and useful life of all magnetic tape systems. Maintenance consists of: preventive maintenance to help prevent breakdowns and corrective maintenance to correct the malfunction if a breakdown occurs.

4-3. FIELD SERVICE

4-4. Regularly scheduled maintenance service is available from the Mincom Sales and Service Office on a contract basis, or service may be obtained on an emergency basis through the same office. In either case, every effort is made to provide the needed service in the minimum amount of time. Warranty service will be provided by the dealer from whom the recorder was purchased.

4-5. TEST EQUIPMENT

4-6. Test equipment or equivalent recommended for alignment and troubleshooting of the recorder is listed in table 4-1.

4-7. PREVENTIVE MAINTENANCE

4-8. Perform the following inspections at intervals considered necessary, based upon the operation and environment in which the recorder is operated.

1. Watch for excessive wear of moving surfaces, such as capstan, capstan idlers, reversing idler, and tape guides.

2. Check all connectors for security and tight fit, and tighten if necessary.

3. Inspect input and output cables for broken or frayed leads, and repair if necessary.

4. Check that all circuit boards in the signal electronics assembly are engaged properly.

5. The capstan speed should be checked by using a neon or fluorescent light. With the light projected on the marked capstan, the marks should appear to stand still if the capstan is rotating at the proper speed. Adjust the servo speed potentiometers if the speeds are incorrect.

4-9. **CLEANING.** The tape handling surfaces should be cleaned periodically. The time between cleaning will depend on the amount of use and environment since increased temperature, dust and humidity will cause the tape handling surfaces to become dirty more quickly. The best precaution is to clean the surfaces daily, and just prior to a recording session.

4-10. To clean the guides, capstan, and reversing idler, use a cotton swab dipped in Freonxylene Cleaner (Mincom Catalog Number 83-9830-0075), or equivalent. Caution must be used when applying this solvent because damages to plastic and rubber surfaces can result, and excessive amounts that could get into the bearing surfaces can dissolve the lubricants, causing bearing problems.

4-11. To clean the capstan idlers, use a dry cotton swab lightly dipped in Freon TF, but do not apply the swab while the transport is in the play mode because some of the fluid may be splashed on other surfaces and may cause damage. After cleaning with Freon TF, allow the idlers to dry and then use a dry swab on the rubber idlers with the tape transport in the play mode. This process will clean the surfaces of fingerprints that may accumulate.

4-12. CORRECTIVE MAINTENANCE

4-13. Corrective maintenance involves procedures for the correction of malfunctions and possible adjustments that are required when assemblies are changed or replaced because of wear or damage. The Series 79 Recorder has been factory adjusted for peak performance. Occasionally certain adjustments may have to be made to maintain optimum performance. The following information provides a procedure for a thorough performance check and adjustment of the recorder.

Table 4-1. Test Equipment or Equivalent

EQUIPMENT	FUNCTION
Flutter Meter, MINCOM 8155	Measure percentage of flutter in reproduced output.
Wave Analyzer, HP 302A	Measure percentage of harmonic distortion.
Oscilloscope, Tektronix RM 504	Measure phase and observe test signals.
VTVM, HP 400LR	Measure voltages and continuity.
Audio Oscillator, HP 200CDR	Provide test and alignment signals.
Frequency Counter, HP5233L	Measure bias frequency.
7-1/2 ips (1/4 inch) NAB calibration tape, Ampex Catalog No. 01-31321-01	To provide standard NAB reproduce alignment signals.
7-1/2 ips (1/2 inch) NAB calibration tape, Ampex Catalog No. 01-31321-05	To provide standard NAB reproduce alignment signals.
7-1/2 ips (1 inch) NAB calibration tape, Ampex Catalog No. 46-90007-01	To provide standard NAB reproduce alignment signals.
7-1/2 ips (2 inch) NAB calibration tape, Ampex Catalog No. 46-90022-01	To provide standard NAB reproduce alignment signals.
15 ips (1/4 inch) NAB calibration tape, Ampex Catalog No. 01-31311-01	To provide standard NAB reproduce alignment signals.
15 ips (1/2 inch) NAB calibration tape, Ampex Catalog No. 01-31311-05	To provide standard NAB reproduce alignment signals.
15 ips (1 inch) NAB calibration tape, Ampex Catalog No. 46-90006-01	To provide standard NAB reproduce alignment signals.
15 ips (2 inch) NAB calibration tape, Ampex Catalog No. 46-90024-01	To provide standard NAB reproduce alignment signals.
30 ips (1 inch) AES calibration tape, Ampex Catalog No. 46-90042-01	To provide standard AES reproduce alignment signals.
30 ips (2 inch) AES calibration tape, Ampex Catalog No. 46-90047-01	To provide standard AES reproduce alignment signals.

4-14. POWER SUPPLY CHECK. Before performing any adjustments on the recorder, the following power supply voltages should be made with input power between 105 and 125 volts, i.e., 60 Hz, or 210 to 250 volts ac, 50 Hz.

NOTE

For maintenance and adjustment information on the power supply unit, refer to the manual supplied with the unit.

1. Connect the positive test lead of a dc voltmeter (50 volt scale) to TB1-6 and the negative lead to TB1-7 of the power supply.

2. Press the transport POWER switch to ON; the dc voltage at TB1-6 should be between 26 and 28 volts dc, the indicator lamps on the meter panel should light, the tape sensor lamp should light, and the RUNOUT indicator lamp on the Remote Control should light indicating K3 on the logic board has operated. If the proper indications are not observed, refer to the troubleshooting table in this section.

3. Place a piece of opaque material (tape sensor mask) in the tape path between the tape sensor light and the tape sensor cell. Press the transport STOP button to back-light. The take-up motor should rotate at approximately 200 rpm in a counterclockwise direction, and the rewind motor should rotate approximately 200 rpm in a clockwise direction.

4. Press the PLAY button, then press the FORWARD button, and then the REWIND button. The voltage at TB1-6 should remain between 26 and 28 volts in all modes.

5. Remove the tape sensor mask, the STOP button should go out.

4-15. CAPSTAN SERVO PC BOARD. The capstan servo adjustments consist of R13 and R15 which set the pulse widths for high and low speeds, and capstan speed R43, R42, and R41 which fine adjusts for 7-1/2, 15, and 30 ips, respectively. R13 and R15 are factory adjustments and seldom need readjustment.

4-16. Pulse Width. If the capstan speeds cannot be adjusted using R41, R42, and R43, perform the following:

1. With the recorder power off, remove the servo PC board, and reinsert using the servo board extender. The plug-in speed selector must be inserted for 7-1/2 ips/15 ips corresponding to LOW and HIGH on the CAPSTAN SPEED switch.

2. Connect an oscilloscope to TP2, and rotate R15 to mid position.

3. Place the recorder in standby, and thread tape onto the recorder using 7-inch reels (10-inch reels will not clear the extender board).

4. Set the CAPSTAN SPEED switch to HIGH and press the PLAY button.

5. The pulse width observed on the oscilloscope should be 20μsec. If not, adjust R13.

6. Set the CAPSTAN SPEED switch to LOW.

7. Adjust R15 for 50μsec. pulse width.

NOTE

For recorders set at 7-1/2 and 15 ips, the speed change plug-in (see figure 4-1), has to be reversed so that the HIGH position of the CAPSTAN SPEED switch is 30 ips, see paragraph 4-18 to change the plug-in.

8. For 15 ips/30 ips recorders change the plug-in then adjust R41 for 30 ips and R42 for 15 ips.

9. Stop the recorder and set the POWER switch to OFF.

10. Assure that the plug-in is in the proper position, then reinstall the servo PC board.

4-17. Capstan Speed. Before checking capstan speed, assure that the play tension is correct. When adjusting speeds, the strobe cap on the capstan may be used, however, drift may be noted. Using a test tape of known frequency and a frequency counter

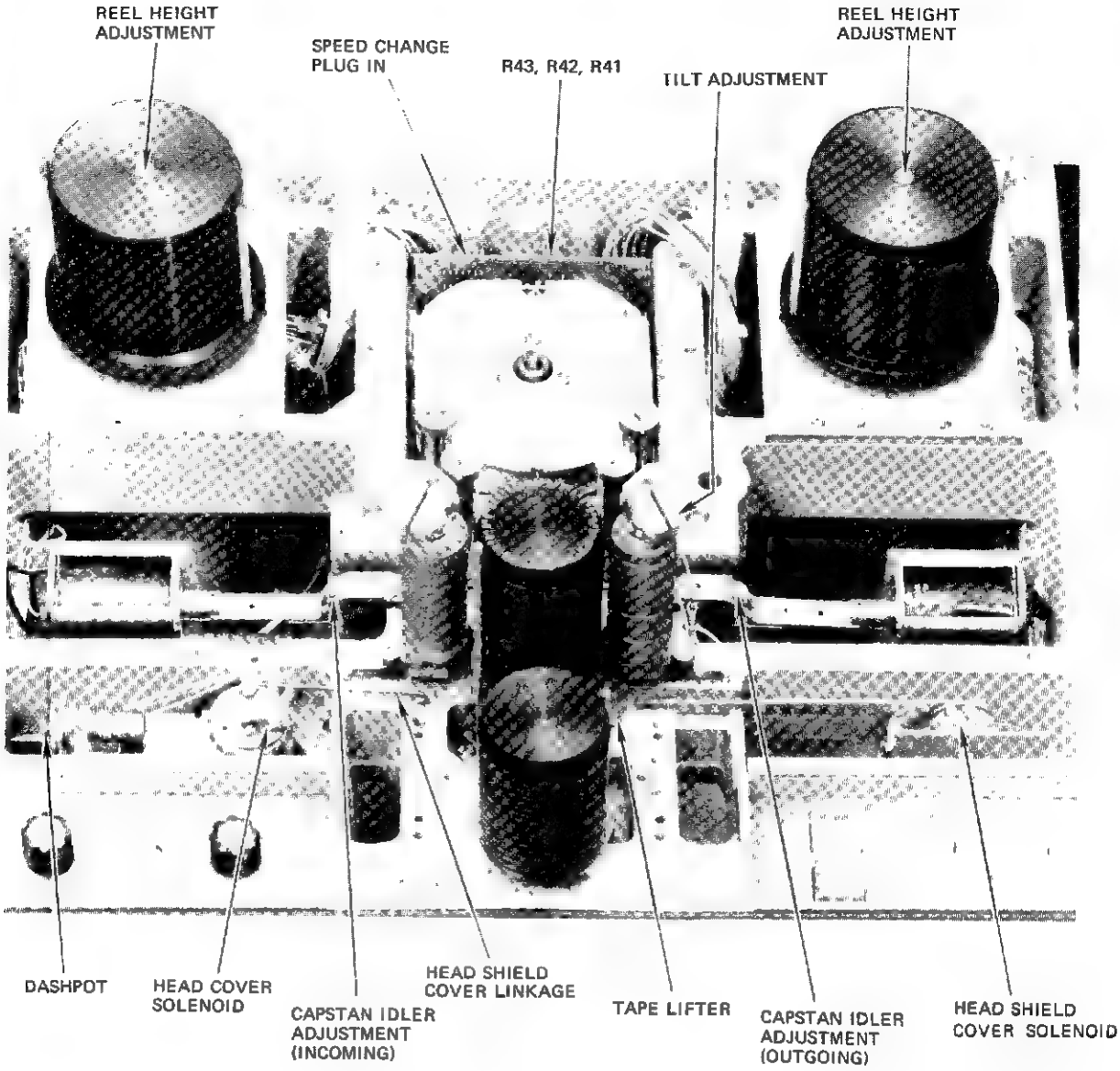

NOTE: THE ERASE, RECORD, AND PLAYBACK HEADS AND SHIELD COVERS ARE REMOVED.

Figure 4-1. Tape Transport Adjustments, Top View

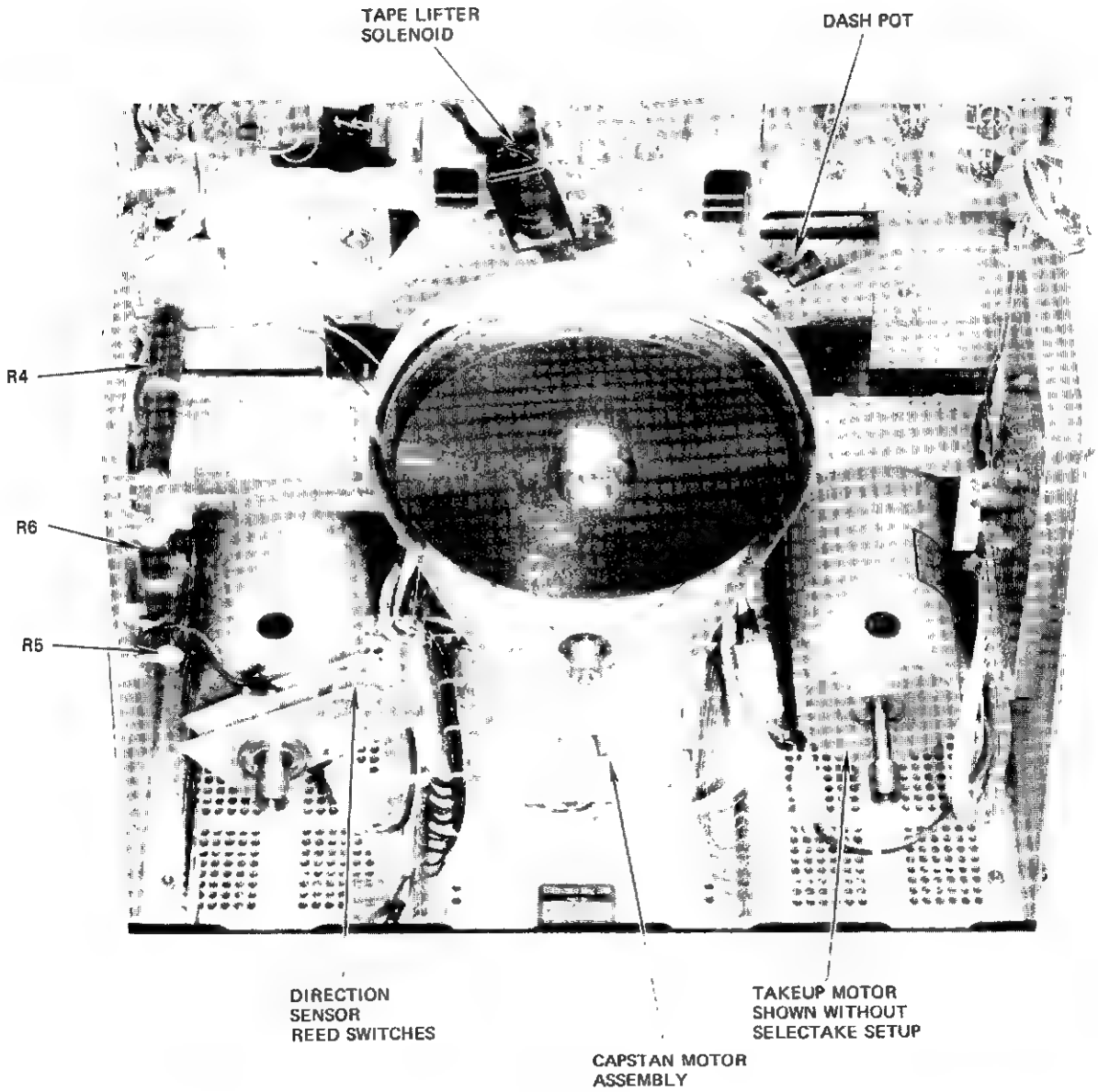

3075

Figure 4-2. Tape Transport Adjustments, Bottom View

will provide accurate setting of speed. Perform the following to make the speed checks:

1. With the power on, thread tape onto the transport, and press the transport STOP button.

2. Set the CAPSTAN SPEED switch to HIGH, then press the PLAY button, and observe that the capstan runs at the high speed (15 ips for 7-1/2 – 15 ips recorders). If necessary, adjust R42 for 15 ips, and R41 for 30 ips.

3. Set the CAPSTAN SPEED switch to LOW, and observe that the speed is one-half of the speed in step 2. If necessary, adjust R42 for 15 ips and R43 for 7-1/2 ips.

4. If the adjustments cannot set the proper speeds, check the pulse width adjustments R13 and R15.

4-18. Capstan Speed Changes. The recorder can be operated at 7-1/2 and 15 ips or at 15 and 30 ips by reversing the position of the speed change plug-in, see figure 4-1. The recorders are normally shipped with the plug-in inserted for 15 and 30 ips operation, and a jumper connected from E10 to E13 on the signal electronics pc board (this yields NAB equalization at 15 ips and AES equalization at 30 ips). If speeds are changed from 15-30 ips to 7-1/2 - 15 ips, remove the jumper from E10 to E13 and connect from E10 to E17 (this yields NAB equalization at both speeds). If CCIR application is desired, connect the jumper between E10 and E12 or remove the jumper. Perform the following:

1. Set the POWER switch to OFF.

2. Carefully remove the plug-in from the servo board (a small screwdriver can be used to raise the plug out of the socket) rotate 180 degrees and reinsert the plug-in.

NOTE

Check that jumper at E10 is connected according to the data in this paragraph.

3. Speeds should correspond to the CAPSTAN SPEED switch positions in paragraph 4-17.

4. The equalizers in the signal electronics will have to be adjusted for the speeds selected in step 2 for recording and playback.

4-19. LOGIC AND BIAS OSCILLATOR PC BOARD. The logic and bias oscillator PC board contains the adjustments for the take-up and supply motor tension (stop and play), mode response, edit stop torque, and the master bias oscillator. The master bias oscillator adjustment is made concurrently with the bias frequency and erasure test in the signal electronics.

4-20. Stop (standby) Tension. The standby tension adjustments R74 and R75 are located on the logic and bias PC board. Perform the following:

1. Place the recorder in the standby mode with the tape threaded.

2. Run tape until an equal amount is on each reel.

3. The tension on the take-up and supply reel should be 3±0.25 ounces for wide tape, 2.5 ounces for 1/2 inch tape, and 1.5 ounces for 1/4 inch tape. If not within tolerance, adjust R74 for the take-up tension, and R75 for the supply tension.

4-21. Play Tension. The play tension adjustments R85 and R86 are located on the logic and bias PC board. Perform the following:

1. Place the recorder in the play mode with tape threaded.

2. Run tape until an equal amount is on each reel. CAPSTAN SPEED may be switched to VAR LOW or HI.

3. The tension on the take-up and supply reels should be 8±0.25 ounces for wide tape, 6 ounces for 1/2 inch tape, and 4.5 ounces for 1/4 inch tape. If not within tolerance, adjust R85 for take-up tension and R86 for supply tension.

4-22. Mode Response. The mode response adjustment R115 sets the forward/rewind response when the MODE RESPONSE switch is in position 3. Adjust R115 so that the rate of change is slow when changing reeling modes, or changing from a reeling

mode to stop or play modes. If R115 is adjusted incorrectly, the motion in rewind or forward may cease.

4-23. **Edit Standby Torque.** When in the edit mode and the recorder is placed in standby, torque is provided by adjusting R63. The torque is set between 3 and 8 ounces determined by the users preference. Perform the following:

NOTE

Adjust only for 1,2,and 4 track recorders.

1. With tape threaded, place the recorder in the edit mode.

2. Press the STOP switch.

3. The supply tape reel should apply torque when the tape is pulled from the reel. Adjust R63 for the desired torque.

4-24. **TAPE TRANSPORT ADJUSTMENTS.** Before attempting mechanical or circuit adjustments on the tape transport, a thorough understanding of the transport operation is necessary. Review the equipment specifications, mechanical and electrical descriptions, and the circuit diagrams in the Schematic Section. Location of the transport adjustments are shown in figures 4-1 and 4-2.

4-25. **Transport Cover Plate Removal.** Access to the adjustments located on the top area of the transport shown in figure 4-1 is obtained by removing the transport cover plate. If reels are on the machine, they should be removed. The cover plate is fastened to the transport by four screws located on the top of the cover plate. After removing the four screws, lift the cover plate up from the rear two to three inches. Then slide the cover to the rear until the retaining clip on the front edge of the cover is disengaged. The cover plate can now be completely removed from the transport.

4-26. **Reel Servo R4 and R5.** Two wire wound slide control resistors are used to regulate current when switching from high to low tension. The resistors are set at the factory as follows: For wide tape with the TAPE TENSION switch set to the HIGH position, the sliders on the resistors are set for a measurement of .7 to .8 ohms to ground (1/2 inch tape is 2 ohms, 1/4 inch tape is 6 ohms). When the switch is set to LOW, the measurement should be 2.5 ohms (1/2 inch tape is 6 ohms, 1/4 inch tape is 2.5 ohms) ±10%. Operate the recorder from forward to rewind, and from rewind to forward; the tape should pack solidly on the reels. Readjust R4 as necessary.

4-27. **Forward/Rewind Pushout.** The forward/rewind pushout R6, see figure 4-2, is adjusted for 15±1 ohm (60 ohms for 1/4 and 1/2 inch tape) so that when changing from forward to rewind or from rewind to forward, the initial pushout of tape at the supply reels after stopping and reversing is equal at each reel (the reels should have equal amounts of tape for the checkout). This can be determined by physically holding the take-up reel after changing from one mode to the other. Adjust R6 so that equal amount of tape is spilled at each reel corresponding to the forward and rewind modes. Further check by reeling 95% of the tape on one reel then reverse the mode. The near empty reel should push out of tape without throwing a loop. Readjust R6 as necessary so that pushout of tape is made smoothly.

4-28. **Tape Sensor Adjustment.** Proper operation of the tape sensor circuit is dependent on the adjustment of R142 with respect to the translucence of the tape leader material used. For this reason it is important that the adjustment of R142 be made using the same type of leader that will be used on the machine during recording sessions, etc. The following steps should be performed when adjusting R142.

1. Place a length of translucent tape leader in the normal tape path over the two outgoing guides in such a manner that the leader falls between the photocell and the tape sensor lamp assembly. The leader should be held taut over the tape guides.

2. Position R142 to the extreme counterclockwise position; then slowly adjust R142 in the clockwise direction until the RUNOUT indicator extinguishes. Note the position of R142.

3. Press the transport STOP button; the STOP button backlights.

4. Remove the leader. The STOP button should go out, and the RUNOUT indicator should light. Slowly adjust R142 in the clockwise direction until the RUNOUT indicator extinguishes. Note this position.

5. Position R142 mid-way between the two points noted above. The RUNOUT indicator should light. When the leader is inserted, the RUNOUT indicator should extinguish and, when pressed, the STOP button should backlight.

4-29. Capstan Belt Adjustment. Occasionally it may be necessary to adjust the belt tension or belt alignment on the capstan drive assembly. The following adjustments should also be followed when replacing the belt or any of the drive components, i.e., capstan, capstan motor, or flywheel.

4-30. Access to the belt drive assembly is accomplished through the bottom of the transport as shown in figure 4-2. To facilitate adjustments in this area, the transport can be pivoted up to approximately 45 degrees by grasping the front edge moulding on the transport and raising the transport to the canted position. To expose the belt inside the dust cover, remove the two screws on the front, and the two screws at the rear of the cover, and slide the lower half of the cover down and away from the top section. Four socket head cap screws located on the capstan motor bracket assembly permit the adjustment of the belt alignment and tension. The following procedure should be used when adjustment of the belt is necessary.

1. Spin the flywheel by hand and observe that the belt remains centered as it passes over the crown of the flywheel. There should be no skewing of the belt (up or down motion across the crown of the flywheel).

2. Position the SPEED switch for 15 ips operation. Press the POWER buttons, and insert the tape sensor mask. Press the STOP button then the PLAY button and allow the capstan to get up to speed. Press the STOP button and observe that the flywheel stops at the same time the capstan motor pulley stops with no belt slippage over the motor pulley or flywheel. If slipping occurs, loosen the four screws on the motor assembly bracket back to a point where the belt just stops slipping. Tighten the screws in the motor bracket at this point.

4-31. Capstan Idler Tracking. The alignment of the capstan idlers with the capstan is important in maintaining the proper tape tension within the Isoloop. Shims may be used under the idler to shift the idler up or down, depending on the alignment needed. Figure 4-3 shows the proper relationship of the idlers to the capstan and the position at which the shims are placed. The tilt adjustment is shown in figure 4-1 and is used to align the idlers parallel with the capstan.

4-32. Capstan Idler Pressure Adjustment. Capstan idler pressure is adjusted by means of a spring-loaded screw in the solenoid linkage which varies the linkage arm length. See figures 4-1 and 4-4. Perform the capstan idler pressure adjustment as follows:

1. Press the plunger of the ingoing idler solenoid all the way in, and turn the adjustment screw counterclockwise until the idler does not contact the capstan.

2. Repeat step 1 for the outgoing idler.

3. Insert the tape sensor mask.

4. Press the POWER switch to ON. Press the STOP button, then the PLAY button. The capstan idlers should move toward the capstan.

5. Adjust the ingoing linkage arm screw clockwise until the idler is positively driven by the capstan, then turn the screw approximately 1-1/4 additional turns clockwise.

6. Repeat step 5 for the outgoing idler.

7. Remove the tape sensor mask, and thread a full reel of tape on the transport.

8. Press the STOP button then the PLAY button; both idlers should press the tape against the capstan, and tape movement should start smoothly without any loops forming in the tape path.

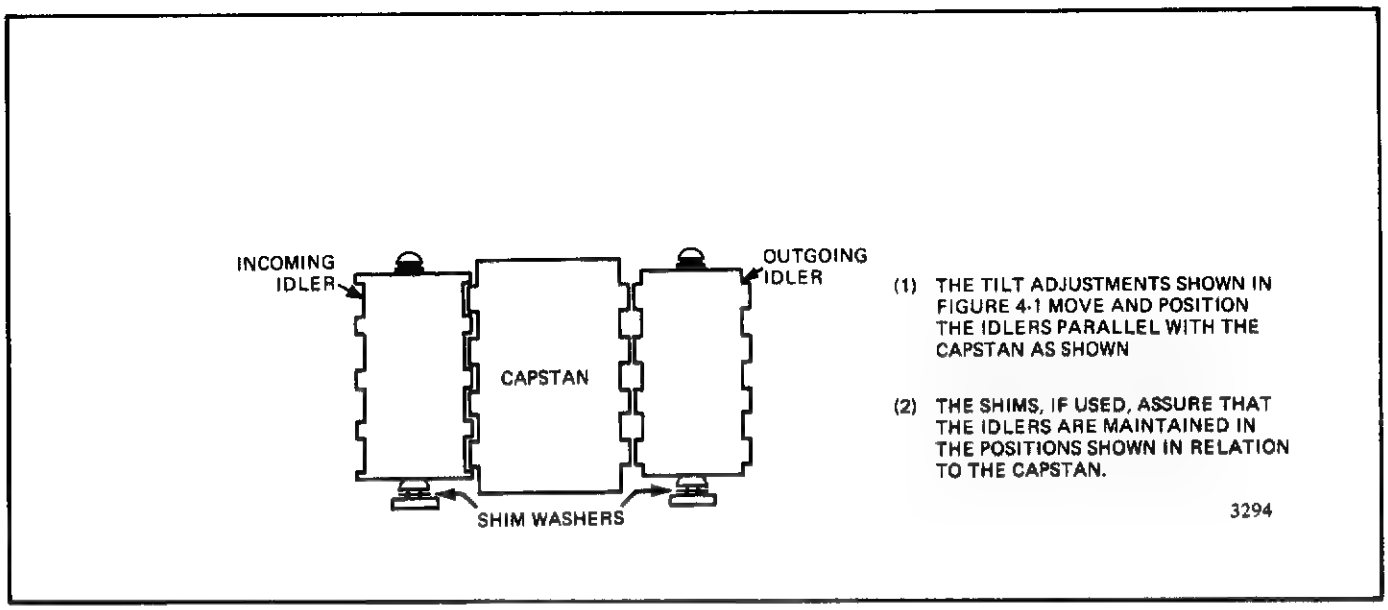

Figure 4-3. Capstan Idler Alignment

9. Observe the tape just before entering between the ingoing idler and the capstan. If any wrinkling or deformation of the tape is observed at this point, the idler pressure is too great. Turn the ingoing linkage arm screw counterclockwise until there is no distortion of the tape as it enters the idler, and the idler is still positively driven.

10. With the finger, press in firmly on the capstan idler solenoid plungers to be certain the plungers are fully seated when the solenoids are energized. The solenoid mounting screws may be loosened, and the solenoid positioned to obtain proper seating of the plunger.

4-33. Reel Height Adjustment. Reel height adjustment is required only if tape drags on the reel flanges, or if a new motor or reel hub is installed. The following procedure should be used if reel height adjustment is necessary.

CAUTION

Before attempting adjustment of the reel height, inspect the reels to be sure that the reel flanges are not bent.

1. Check the distance between the reel hub flange and the top of the motor mounting plate, see figure 4-5.

2. Loosen the two locking screws (10-32 Allen head) accessible through the holes on the side of the reel hub. Remove the snap plug on the top of the reel hub; this allows access to the reel height adjustment screw. Insert a 10-32 Allen wrench, and adjust the reel hub height for 0.706 ±0.01 inch between the top of the reel hub flange and the motor mounting plate.

3. Tighten the two reel hub lock screws.

4. Load and thread a full reel of tape on the transport.

5. Press the POWER switch, the STOP button, then the PLAY button. The tape should wind onto the take-up reel without touching the inside of either reel flange.

6. If the tape should drag on either reel flange, loosen the two lock screws, and adjust the reel hub up or down in the direction away from the flange that the tape is dragging on. Repeat the adjustment until the tape winds on and off the reels without touching the reel flanges. The tape should not crease on the shoulders of the ingoing or outgoing tape guides when the reel height adjustment is correct.

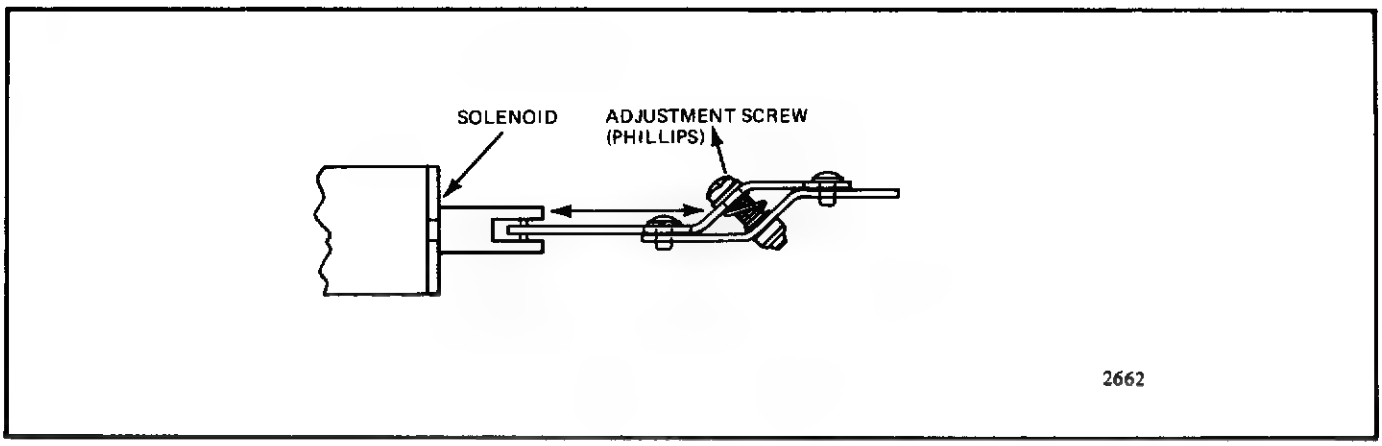

Figure 4-4. Capstan Idler Linkage Adjustment

4-34. Head Shield Cover Adjustment. Place the transport in the play mode, observing the time required for the head shield covers to close after the PLAY button is pressed. The covers should close between 1/2 and 3/4 second. Adjust the head shield cover dash pot air ports for the proper closing time, see figures 4-1 and 4-2. When the transport is placed in either the stop, forward or rewind mode, the head shield covers should open immediately.

4-35. Tape Lifter Adjustment. The tape lifter assembly should seldom need adjustment. However, the following checks can be made to determine proper operation.

1. The tape lifter arms should operate when the transport is activated in the forward or rewind mode, lifting the tape away from the heads.

2. In the play mode, press the tape lifter switch to the left to lift the tape. In forward or rewind mode, press the switch to the right and the lifters will release the tape.

3. Adjustment of the solenoid is accomplished by loosening the two Phillips head screws that hold the solenoid to a bracket, and adjusting the position of the solenoid until the proper operation is obtained.

4. When the tape lifter operates, the tape should be lifted away from the record head; the distance between the tape and record head should be 0.005 to 0.015 inch. Adjustment is accomplished by a setscrew located on the tape lifter arm. Access to the setscrew is obtained by removing the head mounting plate. The setscrew should be adjusted until the tape and record head are separated by 0.005 to 0.015 inch when the tape lifter solenoid is energized. This adjustment is made by trial and error. First, adjust the setscrew; replace the head mounting plate and measure the separation between the tape and record head. Repeat the process until the proper separation is obtained.

4-36. SIGNAL ELECTRONICS ALIGNMENT. The 3M Brand Series 79 Recorder is factory aligned for peak performance. It is recommended that, whenever a circuit board, the heads, or other components are changed, the following applicable alignment procedure be performed to insure optimum performance of the tape recorder. All controls are accessible from the front of the console by opening the two doors below the transport. Prior to performing any alignment on the signal electronics, the output voltage of the dc power supply should be checked. (See section 4-14.)

4-37. Normal Playback Alignment at 15 ips for 15 ips and 30 ips Recorders. For normal 15 ips playback alignment, perform the following:

NOTE

The 7-1/2, 15 ips, and 30 ips playback alignment is accomplished by using industry standard calibration tapes

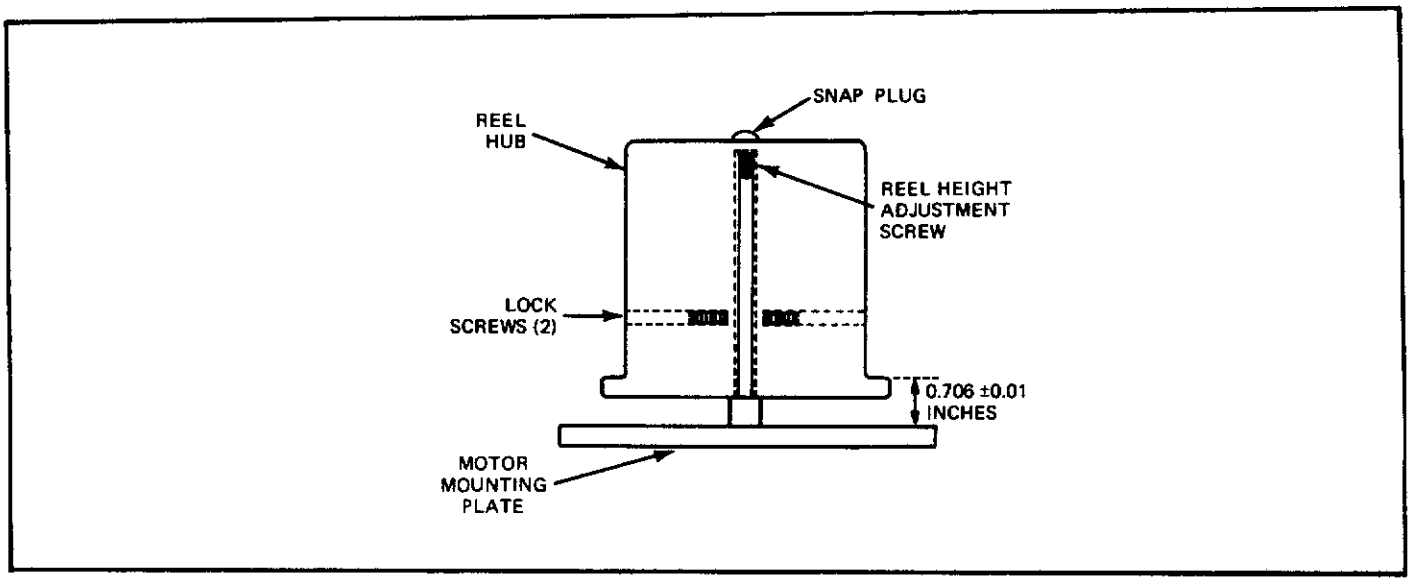

Figure 4-5. Reel Height Adjustment

which conform to the NAB format (see paragraph 4-18 for other equalizations). The calibration tapes are listed in table 4-1. The following alignment procedures, in many cases, make reference to a single channel. In these instances, the procedure should be repeated for all channels requiring alignment.

1. Thoroughly degauss and clean all heads.

2. Remove the head cover plate to expose the head azimuth adjustment screws.

3. Place all output TERMINATION switches to the ON position (600 ohm termination).

4. To provide auditory monitoring of the calibration tape tones and tone frequency voice announcements, connect a power amplifier and loudspeaker to one of the OUTPUT jacks of the recorder.

5. Place the CAPSTAN SPEED switch to the LOW position.

6. Apply power to the recorder by pressing the POWER button.

7. Press the OUT button on the remote control assembly.

8. Load and thread the 15 ips calibration tape on the transport then press the STOP button after the RUNOUT lamp goes out.

9. Set the HF PEAK (R108) fully ccw.

10. Start the recorder in the reproduce mode by pressing the PLAY button.

11. Select a middle track in preparation for reproduce azimuth adjustment in step 13.

12. The first tone on the calibration tape is 700 Hz; this tone is used to establish a calibrated output reference level for each reproduce channel. Observe the VU meters; the output level of each reproduce channel should be -3 VU. If not, adjust the NORM REPRO GAIN (R118) on the corresponding reproduce amplifier for -3 VU.

13. Using the 15 kHz tone, set the HF SLOPE R115 for a VU meter indication of -3 VU.

NOTE

Azimuth is adjusted for one track only.

14. Adjust reproduce head azimuth for maximum output.

15. Repeat steps 12 and 13 for all channels.

NOTE

When using a full track alignment tape, the level at the 50 Hz tone will have to be readjusted in the record/reproduce alignment since the long wavelength fringing effects will cause a slight error at low frequencies.

16. Run the alignment tape to a 50 Hz tone. Adjust LF (R103) for 03 VU for all channels.

17. Check response 50 Hz to 15 kHz and readjust potentiometers if necessary to meet the specification limits of +1, -2 dB.

NOTE

HF PEAK R108 can be adjusted if the 15 kHz level is too low with respect to 10 kHz.

18. Perform the record head phasing and azimuth procedure in paragraph 4-44.

4-38. Sync Alignment at 15 ips for 15 ips and 30 ips Recorders. Perform the following for the 15 ips sync alignment after normal playback alignment:

1. Steps 1 through 8 of paragraph 4-37.

2. Set the HF PEAK (R106) to fully ccw.

3. With the recorder in cue (sync), and the test tape tone at 700 Hz, adjust SYNC REPRO GAIN (R111) for -3 VU.

4. At the 15 kHz tone, adjust HF SLOPE (R113) for -3 VU.

NOTE

When using a full track alignment tape, the level at the 50 Hz tone will have to be readjusted in the record/reproduce alignment since the long wavelength fringing effects will cause a slight error at low frequencies.

5. Run the alignment tape to the 50 Hz tone. Adjust LF R112 for -3 VU.

6. Check response 50 Hz to 15 kHz and readjust potentiometers if necessary to meet the specification limits of +1, -2 dB.

NOTE

HF PEAK R106 can be readjusted if the 15 kHz level is too low with respect to 10 kHz.

4-39. Normal Playback Alignment at 30 ips. Perform the following for adjusting playback at 30 ips.

1. Steps 1 through 8 in paragraph 4-37, except CAPSTAN SPEED set on HIGH and 30 ips calibration tape. Set the HF PEAK (R109) fully ccw but do not readjust R118.

2. Note the level at the 700 Hz tone, the level should be -3 VU +0.5 VU.

3. Run the tape to the 15 kHz tone. Adjust the HF SLOPE (R116) for -3 VU.

NOTE

When using a full track alignment tape, the level at the 50 Hz tone will have to be readjusted in the record/reproduce alignment since the long wavelength fringing effects will cause a slight error at low frequencies.

4. Run the tape to the 50 Hz tone. Adjust the LF (R104) for -3 VU.

5. Check response 50 Hz to 15 kHz and readjust potentiometers if necessary to meet the specification limits of +1, -2 dB.

NOTE

HF PEAK R109 can be readjusted if the 15 kHz level is too low with respect to 10 kHz.

4-40. Sync Alignment at 30 ips. Perform the following to adjust at 30 ips:

1. Do not adjust SYNC REPRO GAIN (R111) if adjusted at 15 ips.

2. Steps 1 through 8 in paragraph 4-37 except CAPSTAN SPEED on HIGH, and 30 ips calibration tape.

3. Set HF PEAK R107 fully ccw.

4. Run the tape to the 15 kHz tone. Adjust HF SLOPE (R114) for -3 VU.

NOTE

When using a full track alignment tape, the level at the 50 Hz tone will have to be readjusted in the record/reproduce alignment since the long wavelength fringing effects will cause a slight error at low frequencies.

5. Run the alignment tape to the 50 Hz tone. Adjust LF (R102) for -3 VU.

6. Check response 50 Hz to 15 kHz and readjust potentiometers if necessary to meet specification limits of +1, -2 dB.

NOTE

HF PEAK R107 can be readjusted if the 15 kHz level is too low with respect to 10 kHz.

4-41. Bias Frequency Adjustment. The master bias frequency is set on the logic and bias PC board, and the individual levels are set on the signal electronics PC boards. A frequency counter should be used. Proceed as follows:

1. Connect a frequency counter to TP1 of a signal electronics PC board.

2. With at least one half of the tracks in record, the counter should indicate 234±0.5 kHz. Adjust C24 on the logic and bias PC board to obtain the correct frequency.

3. Connect a VTVM to TP1, and adjust C14 on the signal electronics PC board for maximum level.

4. Adjust R121 on the signal electronics PC board for 1.0 volt rms on 24 track recorders, and for 1.2 volts rms on other recorders.

5. Connect the VTVM to TP2 and adjust R41 for 0.4 volts rms.

NOTE

After completing the above procedure on all tracks, recheck R121 at TP1 for interaction of adjustments, and readjust R121 and R41 if necessary.

6. Connect the VTVM at the junction of L3, C25, and C51. Adjust L3 for maximum output.

7. Proceed with the erasure test in the next paragraph if desired.

4-42. Erasure Test. Perform the following:

1. Connect an audio oscillator to the INPUT of the channel under test. Set the oscillator for 1 kHz output at a level of +10 dBm.

2. Connect a VTVM to TP1 of the channel under test.

3. Connect a wave analyzer to the output of the channel under test.

4. Start the recorder in the record mode. Then adjust the 1 kHz input signal level to obtain 3 percent third harmonic distortion as read on the wave analyzer.

5. Remove the input signal and rewind the tape to the start of the 1 kHz recorded signal.

6. Start the recorder in the PLAY mode.

7. When the 1 kHz signal appears, establish a reference level on the wave analyzer; then, initiate erasure of the track by pressing the RECORD and PLAY buttons.

8. Press the STOP button and rewind the tape once again.

9. Playback the erased segment of tape, noting the amount of signal erasure on the wave analyzer with respect to the reference level established in step 7 above. The signal should be at least 75 dB below the reference level. The voltage measured at the ERASE TEST POINT should be not more than 1.2 volt rms (1.0 volt rms on 24 track recorders) when 75 dB of erasure is accomplished. Adjust R121 if necessary.

4-43. Record Alignment, 15 ips and 30 ips Recorders. Before making the record alignment, check the record azimuth in paragraph 4-44. The alignment is accomplished by using clean, new degaussed tape. Perform the following to align 15 - 30 ips recorders.

1. Steps 1 through 6 in paragraph 4-37.

2. Press the master IN button on the remote control assembly.

3. Load and thread clean new tape then press the STOP button after the RUN-OUT lamp goes out.

4. Connect 700 Hz audio signal at +4 dBm to the input of the channel under test. Adjust R62 to obtain 0 VU.

5. Reduce the input to 0 dBm (-4 VU), press the master OUT button, initiate record, and set frequency to 15 kHz. Set bias adjustment R41 to obtain a peak in output then turn R41 cw (over-bias) until 5 dB below the peak indication.

6. Set input back to +4 dBm, recheck for 0 VU at 700 Hz. Adjust R49 for 0 VU if required.

7. Set the input to 10 kHz and adjust C21 to obtain 0 VU.

8. Check response from 50 Hz to 15 kHz; should be +1, -2 dB from 50 Hz to 15 kHz. Readjust preceeding as necessary.

9. Repeat step 7 at 30 ips and adjust C19 to obtain 0 VU.

10. To check distortion, set frequency to 700 Hz at +12 dBm. Check third harmonic distortion at this level by increasing the input until 3% distortion of third harmonic is obtained. Note the input level.

11. To check biased tape noise, remove the input and record a segment of tape. Rewind and play the tape segment. The residual noise should be compared with the level used to obtain the level noted in step 10. The levels should correspond to the signal-to-noise in the specification sheet.

4-44. Record Head Azimuth Alignment. Perform the following.

1. Thread a degaussed reel of tape on the transport. Set the CAPSTAN SPEED switch for 15 ips operation. Apply a 2.5 kHz +4 dBm signal to the recorder input.

2. Connect the outputs from the reproduce electronics corresponding to the top and center tracks to the inputs (vertical and horizontal, respectively) of an oscilloscope to produce a lissajous pattern. Press the OUT button.

3. Start the recorder in the record mode, and adjust the record head azimuth screw (see figures 4-6 and 5-1) for minimum phase error. Sweep the input oscillator frequency over the range of 30 Hz to 15 kHz while maintaining an input level of +4 dBm. Check each combination of any two tracks, and optimize the phase error for less than 90 degrees.

4. If making complete alignment, go to step 4-38.

4-45. Normal Playback Alignment at 15 ips for 7-1/2 ips and 15 ips Recorders. Perform the following to adjust for 15 ips on 7-1/2 ips and 15 ips recorders:

1. Steps 1 through 18 in paragraph 4-37 except CAPSTAN SPEED on HIGH, and use adjustments for HIGH speed (HF PEAK is R109, HF SLOPE is R116, and LF is R104).

2. In paragraph 4-37, use R109 in step 9, R113 in step 13.

4-46. Sync Alignment at 15 ips for 7-1/2 ips and 15 ips Recorders. Perform the following to adjust for 15 ips on 7-1/2 ips and 15 ips recorders:

1. Steps 1 through 6 in paragraph 4-38 except CAPSTAN SPEED on HIGH, and use adjustments for HIGH speed (HF PEAK is R107, HF SLOPE is R114, and LF is R102).

2. In paragraph 4-38 use R107 in step 2, R114 in step 4, and R102 in step 5.

4-47. Normal Playback Alignment at 7-1/2 ips. Perform the following to adjust at 7-1/2 ips.

1. Steps 1 through 10 of paragraph 4-37 except use a 7-1/2 ips calibration tape.

2. Run the tape to the 7.5 kHz tone. Adjust HF SLOPE (R115) for -13 VU.

3. Run the tape to the 12 kHz tone. Adjust HF PEAK (R108) for -13 VU.

4. At 50 Hz, adjust LF (R103) for -13 VU.

4-48. Sync Alignment at 7-1/2 ips. Perform the steps in paragraph 4-47 to adjust sync at 7-1/2 ips, except use appropriate controls R113, R106, and R112 respectively.

4-49. Record Alignment for 7-1/2 ips and 15 ips Recorders. Before making the alignment, check the record azimuth in paragraph 4-44. The alignment is accomplished by using clean new degaussed tape. Perform the following to align 7-1/2-15 ips recorders:

1. Steps 1 through 7 in paragraph 4-43 except CAPSTAN SPEED switch set on HIGH.

2. For 15 ips set the input to 10 kHz and adjust C19 to obtain 0 VU.

3. For 7-1/2 ips recorders:

   a. Repeat steps 1, 2, and 3 in paragraph 4-43.

   b. Connect a 700 Hz audio signal at -6 dBm to the input. Adjust R62 to obtain -10 VU.

   c. Press the OUT button and initiate record mode.

   d. Set frequency to 12k at -6 dBm. Adjust C21 for best record/reproduce response.

   e. Sweep frequency from 50 Hz to 12 kHz and note response. Readjust if necessary.

4-50. TROUBLESHOOTING

4-51. The construction of the 3M Brand Series 79 Recorder provides a fast and easy method of repair. The signal electronics assembly is so arranged allowing an individual circuit board of any channel to be replaced or exchanged with a similar board from a known good channel. When boards are interchanged, alignment of the channel(s) may be necessary to provide peak performance.

4-52. Failure of the recorder to operate properly may be caused by a malfunction in the recorder, or by external causes. Before troubleshooting the recorder, verify that the power and signal connections are correct, and that all of the operational controls are properly set. Some of the troubles most likely to be encountered are presented in table 4-2. However, the best troubleshooting tool is a familiarity with the equipment and a thorough understanding of its theory of operation. The following paragraphs contain some general precautions which should be observed when performing maintenance on the recorder.

1. Do not strike the reversing idler. It is delicate and located in a vulnerable position at the front of the mechanism. If damaged, flutter will be excessively high.

2. Exercise great care in installing head mounting plates. They can be screwed into place with a head lead pinched between the mounting plate and the transport casting, thus breaking wire insulation or cutting a head lead. Be certain no leads will get in the way before installation.

CAUTION

Do not remove any of the signal electronics pc boards with power on. Damage to meters, circuitry, or speakers could occur, and heads could be magnetized.

4-53. FACTORY REPAIR SERVICE

4-54. If desired, the recorder or major assemblies may be returned to the factory (transportation prepaid) for repair. When recorder or assembly is returned:

1. Indicate the symptom of defect. State as completely as possible, both on an instrument tag and on the order form, the nature of the problem encountered. Too much information is far better than too little. If the trouble is intermittent, please be specific in describing the instrument's performance history.

2. Give special instructions. If any changes in the instrument or assembly have been made, and it is desired to retain the modified form, please indicate this specifically.

3. To facilitate expeditious repair, your Contract or Purchase Order authorizing the work should be directed to Mincom Division - 3M Company - 300 South Lewis Road - Camarillo, California 93010 Attn: Contracts Department.

Table 4-2. Troubleshooting Guide

SYMPTOM	CAUSE	CORRECTION
	TRANSPORT	
1. Transport stops when leader passes photocell R1.	Tape sensor adjustment R142 out of adjustment.	Adjustment R142 in accordance with Tape Sensor Adjustment procedure.
2. STOP button does not light when tape is threaded and button is pressed.	Photocell R1 defective.	Replace R1.
3. Transport coasts to stop from play mode when STOP button is pressed.	Braking circuit cannot be operated during stop sequence because the reed switch is not closed.	Adjust flag stops and clearance of magnets over reed switches on direction sensor board (56004A020).
4. Transport coasts to stop from forward mode when the STOP button is pressed. Possibly causing tape breakage.	Same as 3, above.	Same as 3, above.
5. Transport coasts to stop from rewind mode when STOP button is pressed.	Same as 3, above.	Same as 3, above.
6. Tape continues in rewind when STOP button in pressed. Does not clear after tape runs out or POWER switch is turned off and on.	Defective braking circuit.	Check SCR1, Q20, and Q21 circuitry.

Table 4-2. Troubleshooting Guide (Cont.)

SYMPTOM	CAUSE	CORRECTION
	TRANSPORT	
7. Transport throws loop when starting in play mode, generally worse near end of reel rather than beginning.	Ingoing solenoid capstan idler needs adjustment.	Adjust ingoing capstan idler linkage.
8. Tape lifter hangs up.	Misalignment or in need of lubrication.	Plunger must not drag too forcefully against core of solenoid. Body should be so positioned to avoid such side drag, and to provide best compromise of depth of travel to satisfy easy override yet adequate lifting power.
9. Tape lifter fails to lift tape from heads.	Plunger operating too far from seated position.	Loosen two mounting screws, lubricate plunger and shift body (holes are oversize) to achieve above requirements.
10. Transport appears com-completely dead.	Intermittent operation of power switch S1.	Press a few times to observe if lights come one.
	Power supply	Check power supply.
	ELECTRONICS	
1. Monitor lamps do not come on when POWER button on transport is pressed.	Short circuit on 28 vdc bus in electronic module assembly.	Remove one plug-in board at a time and reinsert to determine if fault is in cards or module wiring.
	Defective 28 vdc power supply	Troubleshoot power supply using instruction manual supplied with the unit as a guide.
2. Noise or intermittent operation in any area of electronics module.	Dirty contacts at base of card plug.	Remove and reinsert board. Use ink eraser to clean contact surfaces.
3. High distortion.	Insufficient bias.	Adjust record bias as prescribed under Signal Electronics Alignment.
	Magnetized head, either record or reproduce head.	Degauss heads.
4. Poor noise figure.	Noisy preamplifier.	Substitute another board to compare noise.
	Defective playback head requiring excessive gain.	Try break-in tape if head appears to be smeared over by oxide material. Replace head if necessary.
	Lack of good system ground can produce hum or buzzing. Third wire in power cord not always effective as good ground.	Connect casted frame of transport to good earth ground.
5. Wrong output level.	Improper choice of line impedance or termination.	Check TERMINATION switch position of the channel in question.

4. Pack securely and label. Proper packaging saves money. The small amount of extra care and time it takes to cushion a part or instrument properly may prevent costly damage while in transit. Make certain that the address is both legible and complete; failure to do so often results in needless delay. Address all shipments and correspondence to:

   Mincom Division
   3M Company
   300 South Lewis Road
   Camarillo, California 93010
   Attn: Receiving Inspection

5. Show return address on repair correspondence. Please clearly indicate the exact address the equipment should be returned to after repair is completed. Terms are net 30 days - f.o.b., Camarillo, California.

SECTION V
TECHNICAL DESCRIPTION

5-1. GENERAL

5-2. The 3M Brand Series 79 Recorder consists basically of a tape transport and the required record and reproduce electronics with the associated control circuits. The signal to be recorded is amplified and applied to a magnetic record head which impresses a magnetic pattern in the oxide coating of the magnetic recording tape in accordance with the variations of the input signal. During reproduction, the variations in magnetic flux that were impressed on the tape during recording are sensed by a reproduce head, amplified, and applied to the recorder output and monitoring circuits.

5-3. In order to record and reproduce with a minimum of distortion, a high-frequency bias is mixed with the input signal at the record head so that recording takes place in the portion of the magnetization curve that is essentially linear. The signal recovered by the reproduce head must also be equalized by circuits that compensate for the response characteristics of the reproduce head at low and high frequencies. The high-frequency signal that is used for bias is also used to erase signals that may have previously been recorded on the tape. The erase signal is applied to a separate erase head, which is similar to the record head, but applies the high-frequency signal at a much higher level. The signal applied to the erase head drives the magnetic material of the tape to complete magnetic saturation to obliterate any signal or noise that may have been previously recorded on the tape. Then, as the tape moves out of the saturating field, alternate field oscillations result in completely degaussed tape.

5-4. The Isoloop tape drive maintains differential tension within the loop of tape passing over the heads and ensures that the tape remains in close contact with the heads during tape travel. The close contact ensures that the magnetic flux impressed by the record head penetrates the oxide uniformly and eliminates variations in amplitude that can result if the close head-to-tape contact is not maintained. Similar amplitude variations can take place if the tape is not maintained in close contact with the play head.

5-5. TAPE TRANSPORT MECHANICAL FUNCTIONS

5-6. Figure 3-3 illustrates the basic mechanical operation of the tape transport. When tape is placed in the Isoloop drive path as shown, the tape transport motion control stop logic circuits are automatically activated by the photoelectric tape sensor. To place the transport in the standby condition, the transport stop button must be pressed. Operation of the transport is then accomplished by pressing the desired tape motion control switch either on the transport panel or at the remote control assembly. Each tape motion control switch operates through a system of safety interlock electronic switches that allow any button to be pressed in any sequence at any time with complete safety to the tape and machine.

5-7. Components of the tape drive system (see figures 4-1, 4-2, and 5-1) consist of a capstan drive motor, two reel drive motors, and control circuitry that determine the mode of operation. When in play and record modes, the tape is moved through the Isoloop by the capstan. The reel drive motors maintain constant tension on the tape as it enters and leaves the loop. When in fast-forward or rewind, the capstan motor is stopped, tension is released within the Isoloop, and the reel drive motors move the tape through the loop independently of the capstan. Before entering and after leaving the Isoloop, the tape passes over guides to ensure that the tape is properly aligned with the magnetic heads.

5-8. When the transport is placed in the play or record mode, the capstan motor starts, the solenoid press the capstan idlers (pucks) against the tape, clamping the tape to the capstan to prevent the tape from slipping. The tape is moved past the incoming idler and capstan, past the erase and record heads, and around the reversing idler. From the reversing idler, the tape passes the play head, and the outgoing idler and capstan. During fast-forward and rewind, solenoid-actuated tape lifters hold the tape away from the heads so that the signals on the tape will not be played back which would cause an annoying squeal. The tape lifters are inactive in the play, record, and stop modes. The tape lifter (8, 16, and 24 track recorders) may be manually overridden in

forward or rewind, by pressing the tape lifter switch on the remote control assembly to restore the tape against the head.

5-9. The play and record heads are enclosed in a magnetic shield to avoid pick-up of noise from surrounding equipment and bias-frequency energy radiated by the erase and record heads. Two solenoid-actuated covers are positioned over the tape as it passes the record and play heads and serve to complete the shielding of the heads. During fast-forward, rewind, and stop, the hinged covers are moved away from the head to allow tape to be lifted by the tape lifters, and in the stop mode allows easy threading of the tape. The covers are closed during play and record.

5-10. TRANSPORT AND LOGIC CIRCUITRY

5-11. The components which make up the transport and logic circuitry are mounted on the transport chassis and on the logic and bias oscillator printed circuit board, see figures 6-1 and 6-3.

5-12. POWER CIRCUITS. The power switch (S1) is set to the ON position to energize a relay in the power supply unit. The relay connects 115 volts, 60 Hz (or 230 volts, 50 Hz) to the power supply input transformer. When S1 is set to ON, the power supply provides +28, +17, and +15 volts dc to operate the recorder, and the following occurs: (1) The VU meter lamps illuminate. (2) The head shield covers open because Q32 conducts providing ground at J1-m to energize L5 and L6. (3) DS1

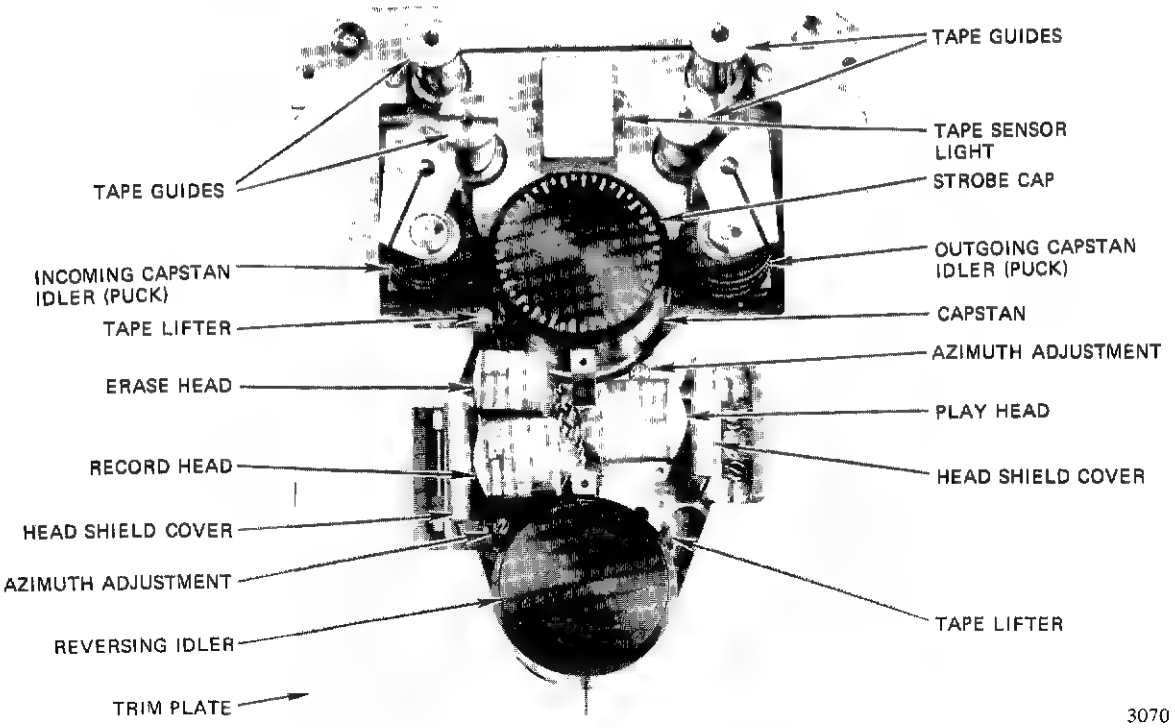

Figure 5-1. Tape Drive

illuminates and decreases the resistance of R1. The low resistance of R1 connects through J1-15 to base of logic switch Q33. Switch Q33 turns off, which turns on Q34. Ground provided by Q34 energizes cutout relay K3 until tape is threaded to break the light path of DS1. K3 contacts 7, 11 provide ground at J4-11 to light the runout lamp. Standby is not initiated until tape is threaded and the transport stop switch is pressed to set the stop logic circuitry.

5-13. TAPE THREADED CONDITION AND STANDBY. When tape is threaded through the Isoloop onto the take-up reel, light from DS1 is blocked by the tape causing the resistance of R1 to increase. Transistor Q33 conducts (adjusted by R142) and turns off Q34 to deenergize K3. Relay K3 contacts operate as follows: (1) 9, 5, and 10, 6 open to remove the shorts from the take-up and supply reel motors. (2) 12,8 open to remove +28 volts from the reel motor circuits, delayed by charge time of C16. (3) 11, 7 open to extinguish the runout lamp and remove ground from the play and stop busses. (4) 11, 3 close to provide ground to the transport stop switch through J2-C, and (5) 12, 4 close to apply +28 volts to J3-15. After threading tape, the transport stop switch has to be pressed to place the recorder in standby and apply torque to the reel motors. When the transport stop switch (S5) is pressed, ground is applied by S5 contacts 2, 4 to J1-C, the input of the stop flip-flop Q1, Q2, Q3, and Q4. Ground through CR79 and R148 turns on Q37 to energize fail-safe relay K4 which: (1) opens contacts 4, 12 to remove ground, (2) closes contacts 7, 11 to provide continuity (J1S and J1-12) between the transport stop and play switches, and (3) opens contacts 9, 1 and 10, 2 to remove shorts from the take-up and supply reel motors. Ground to the input of the stop flip-flop, sets the circuitry as follows: (1) Q4 cuts off and Q3 turns on which causes Q2 to conduct and provide ground to the stop lamp and to the stop buss. (2) The high level from the collectors of Q3, Q4 turns on Q22 to provide ground and energize the take-up and supply motor stop (standby) tension circuitry R74 and R75. The high level from Q3,Q4 also provides a high level to the forward/rewind braking circuit at C4, R70; the braking circuit Q21 is turned on to inhibit CR1 except when in rewind or forward. When stop is initiated, Q32 is also turned on to increase tape tension by connecting resistance (R78 and R79) in parallel with R74 and R75 until C6 charges to cut off Q23; normal standby tension is then applied by R74 and R75.

5-14. FROM STOP TO PLAY. Ground path for the play switch (S6) contacts 1 and 2 is from J1-12 through K4 contacts 7, 11, to J1-S through S5, to J2-C, to grounded contacts 3, 11 of K3. When the play switch is pressed, contacts 2, 4 close to ground the output at J1-D which is connected to the set input of play flip-flop Q5, Q6, Q7, and Q8. Transistor Q7 conducts to turn Q6 which provides ground to: (1) light the play lamp, (2) reset the stop flip-flop through CR4 and extinguish the stop lamp, (3) enable master sync at 4-8, and (4) inhibit the rewind and forward flip-flops. The high output at Q7, Q8 provides the following: (1) Q24 is turned on, delayed by C28 to allow pucks to pull in, to connect the play tension circuit R85 and R86. (2) Transistor Q25 turns on which connects R87 and R88 in parallel with the play tension circuit to provide a starting pulse for the reel motors. (3) R87 and R88 are connected until C8 charges through R88 and R90 and Q25 turns off; the motor torques are then provided by the normal play tension circuit adjustable by R85 and R86. Relay K2 energizes when Q24 turns on, and K2 contacts 10, 2 and 9, 1 open, 10, 6 and 9, 5 close. Open contacts 10, 2 release the capstan brake. Contacts 10, 6 close to turn on Q26 providing ground to turn on the capstan servo drive, and Q27 cuts off removing ground from the capstan servo inhibit. Contacts 9, 5 close to discharge C17. (Contacts 9, 1 close when play stops; in the event the play button is pressed too quickly after a stop switch is pressed, the RC time of C17 prevents Q24 from conducting too quickly thus delaying going into play.) The ground at Q24 also turns on Q29 which turns on Q30 and Q28 to provide ground and energize the "in" and "out" pucks for pull in. As noted above, the pucks pull in just before tension is applied since Q29 turns on before Q24 is saturated.

5-15. FROM PLAY TO STOP. When in the play mode, the stop button is pressed to stop the capstan and reel motors as follows: The stop flip-flop (Q2, Q4) changes state. Q2 grounds the stop buss and Q3 applies a high level to turn on Q22. The stop buss resets the play flip-flop (Q6, Q8) which reverses the play high level and play low level busses. The play flip-flop low level at Q8 turns off Q24 to cut off the play tension circuit and deenergize K2. Contacts 10, 2 of K2 apply +28 volts at J2-8 (the capstan brake signal) causing Q26 and Q27 to switch and turn off the capstan servo (high level at J2-15 and ground at J2-16). The high level at Q24 collector turns off Q29 which turns off Q28 and Q30 to release the "in" and "out" pucks.

5-16. **FROM STOP TO REWIND.** When the rewind button is pressed, ground is applied by S7 contacts 2, 4 to J1-2 and sets the rewind flip-flop (Q13, Q15). The low level from the collector of Q13 resets the stop flip-flop, and provides a low level input to the junction of CR83 and C12. Q50 is also inhibited so that a high level at 4-8 inhibits the master sync buss. The high level from the collector of Q15 provides a high level to C11. The inputs to CR80, C13 and C14 are high and low, respectively, from the forward flip-flop (Q17, Q19). The braking circuit Q20 is inhibited by the low level input through CR30, and Q21 is inhibited by the charge on C5 during the stop mode so that the braking circuit is inoperative from stop to rewind, however, C5 discharges after rewind is initiated to enable the braking circuit. The reel motor drivers are controlled by the forward/rewind circuitry (see paragraph 5-24).

5-17. **FROM REWIND TO STOP.** When the stop button is pressed in the rewind mode, the stop flip-flop is set and the rewind flip-flop reset. Action is similar to "from play to stop."

5-18. **FROM STOP TO FORWARD.** Stop to forward action is similar to "from stop to rewind" except for using different circuit components.

5-19. **FROM FORWARD TO STOP.** Forward to stop action is similar to "from rewind to stop" except for using different circuit components.

5-20. **FROM FORWARD TO REWIND.** Forward to rewind is similar to "from stop to rewind" except Q21 is not inhibited, and the braking pulse is provided by CR1. C4 charges through the pulse limiter divider R67 and R68. The positive pulse on CR1 gate turns on CR1, and a positive voltage through R65, CR1, rewind reed switch (J2-U to J2-17), CR81 through R105 to the base of Q43. Q43 turns on and turns on Q44 to apply a low level input to the take-up motor to provide a fast stop. The inputs to Q41 and Q43 are reversed by the forward and rewind flip-flops to provide reverse signals.

5-21. **FROM REWIND TO FORWARD.** Rewind to forward is similar to "from forward to rewind."

5-22. **FROM REWIND TO PLAY.** Rewind to play is similar to "from rewind to stop."

5-23. **FROM FORWARD TO PLAY.** Forward to play is similar to "from rewind to stop."

5-24. **FORWARD/REWIND LOGIC.** The forward/rewind logic consists of the forward flip-flop (Q16, Q17, Q18, Q19), rewind flip-flop (Q12, Q13, Q14, Q15), C11, C12, C13, C14, CR58, CR59,, CR60, CR61, μA741, Q41 through Q46 and associated resistors. The forward and rewind commands are initiated by pressing the forward and rewind push-buttons which set and reset the forward and rewind flip-flops, and reset the stop and play flip-flops. The levels of the forward and rewind busses are set either high or low by the flip-flops, determined by the initiated mode. When initiated, the level to the forward flip-flop is set low at the collector of Q17 and high at the collector Q19; the rewind flip-flop is set high at the collector of Q13 and low at the collector of Q15. In reset, the flip-flop outputs to the busses are reversed. Table 5-1 shows the input levels to the forward and rewind circuitry in forward, rewind, and play or stop modes.

NOTE

Q41, Q42, Q43, and Q44 increase or decrease conduction, and do not necessarily cut off. The text below uses "turn on" and "cut off" for simplicity. Turn on is increase and cut off is decrease.

5-25. The forward signal level high at CR83 and low at CR80 cuts off Q41 and turns on Q43; Q42 cuts off and Q44 turns on. The signal level inputs to the motor drivers are high at CR110 and low at CR104. The motor drivers are commanded to make the take-up motor rotate to take-up tape and the supply motor to provide torque after an initial feed out of tape (see paragraph 5-44). In rewind, the action is the reverse of forward. The output levels of Q42 and Q44 are modified by tape tension and mode response circuitry (C11 through C14, μA741, Q45 and Q46). The tape tension switch applies +28 volts at J1-5 (low tension) or at J1-6 (high tension). The +28 volts at J1-5 through R162 causes the output of μA741 to provide a positive offset voltage and Q46 will conduct through Q45 and nominal resistor R110. The output at the collector of Q46 changes the conduction of Q42 and Q44 to change reel motor torques. With the switch set on high tension, the +28 volts at J1-6 through R163 changes the offset of μA741 and the torque of the motors is changed. The three position mode response switch (S10) is connected to the input (pin 5) and the output (pin 10) of μA741. The purpose of S10 is to modify the velocity rate of change when changing from one reeling mode to another, or when changing from a reeling mode to

Table 5-1. Forward and Rewind Input Levels

CONNECTION	FORWARD	REWIND	PLAY or STOP	
CR83 and C12	Q13-C HIGH	Q13-C LOW	Q13-C HIGH	The anodes of CR83 and CR80 are connected to the bases of Q41 and Q32, respectively, through R99 and R105. The command levels to Q41 and Q43 control the direction of motion. In play or stop, Q41 and Q43 are both but off which cuts off Q42 and Q44 to inhibit the forward and rewind outputs.
CR80 and C13	Q17-C LOW	Q17-C HIGH	Q17-C HIGH	
C14	Q19-C HIGH	Q19-C LOW	Q19-C LOW	
C11	Q15-C LOW	Q15-C HIGH	Q15-C LOW	

a stop or play mode. The input to μA741 pin 5 is through the capacitive network (C11 through C14). The inputs are shown in table 5-1. At any given command, the action for the three modes is as follows: (1) In position 1, the output of μA741 is grounded at R124. The forward and rewind Q41, Q42, Q43, and Q44 operate normally since Q46 is at cut off, the reel motor responses are fast. (2) In position 2, the voltage from the +28 volt network at pin 3 (non-inverting input) is grounded at R119. The positive input pulse from C11-C14 during a change of state (forward, rewind, stop, play) is fed through μA741. Q46 drives the pulses to change the output levels of Q42 and Q44. The reel motors respond slowly for the duration of the positive pulse time. At the end of the pulse, the reel motors speed up to normal maximum speed as in mode 1. (3) In position 3, the switch does not effect μA741. The pulses enter as in position 2 to slow the motors responses, but the input at pin 3 is also at a positive level set by R115. The level at which R115 is set determines the speed of the motors since Q46 will conduct according to the level set at μA741 pin 5. The response is also determined by the feedback from the motor drivers through R120, R122, and R121, R123. When the feedback equals the level at pin 5, maximum speed for that level is attained.

5-26. **BRAKING CIRCUIT.** The braking circuit Q20, Q21, and CR1 provide braking in the forward and rewind modes when shifting from forward to rewind or vice versa. The braking signal is supplied when CR1 is turned on by the charging of C4 through R67 and R68. Switch Q20 is normally turned on by the +28 volts applied through the edit relay K1 contacts 9, 1 to prevent CR1 from firing except when in forward or rewind, but Q20 is turned off by a low from the forward or rewind busses through either CR29 or CR30 to enable CR1. The thyristor is connected to +28 volts through R65 forming a divider in series with R64. When CR1 fires, a positive potential is connected to the base of Q41 or Q43 as follows to apply a braking pulse to the reel motor drivers: J2-U to the common line of the reed switches through a reed switch to J1-16 or J1-17, through CR81 or CR84, through R99 or R105. After C4 charges to fire CR1, Q21 turns on. A noise filter, C2 prevents CR1 from firing if excessive or spurious noise is present. In the edit mode, the +28 volts is removed from Q20 when K4 contacts 9, 1 open; the braking circuit is then utilized as explained in paragraph 5-30 (EDITING).

5-27. **TAPE TENSION.** Tape tension can be changed by the two position tape tension switch S11 set to high or low. The reel motor resistive potentiometers R4 and R5 (see figure 4-2) are connected to either CR115 or CR116. When the switch is set to high, CR115 is connected and limits the voltage of the network to +10 volts; in the low position, CR116 limits the voltage to +15 volts. Tape tension is varied according to the high and low position by controlling the current to the motors since the voltages at CR115 and CR116 cannot exceed +10 and +15 volts, respectively.

5-28. **RECORD MODE.** The record mode flip-flop Q9, Q11 and transistor Q10 initiate the record mode. The transport is placed in the record mode by simultaneously pressing the play and record pushbuttons. When the transport or remote play and record pushbuttons are pressed, J2-3 or J4-3 connected to the base of Q10 is grounded which turns on Q10. +28 volts through CR22 and Q10

turns on Q9 which provides ground to: (1) J1-4 to light the record lamp. (2) J4-5 which is the input to the master remote control pin V. (3) Inhibit Q38 and the edit circuitry through CR26 and R57 when in record. (4) J3-5, the Selectake input. Transistor Q11 is at cut-off so that +28 volts from R31 maintains Q9 in conduction. To reset the record flip-flop, the stop flip-flop is set by pressing the stop button which resets the play flip-flop; the play buss low level at CR12 cuts off Q9 to reset the record flip-flop. If the forward or rewind push-buttons are pressed when in record, the forward or rewind buss resets the play flip-flop which resets the record flip-flop. When in the edit mode, +28 volts through CR22 to Q10 is removed by the edit relay contacts 1, 9 to inhibit Q10. The remainder of the record mode circuitry pertaining to signal electronics is explained in paragraphs 5-50, 5-58, and 5-70.

5-29. TAPE RUNOUT. Tape runout is initiated by DS1 and R1 (see figure 6-1). With no tape between DS1 and R1, light from DS1 lowers the resistance of R1 which is connected at J1-15 to the base of Q33 (see figure 6-2). Switch Q33 turns off and Q34 turns on to provide +28 volts to energize the cutout relay K3. K3 contacts operate as follows: (1) 11, 3 open to remove ground from the transport stop switch. (2) 11, 7 close to provide ground to light the RUNOUT lamp, and to initiate stop. (3) 10, 6 and 9, 5 close to short the reel motors. (4) 12, 8 close to apply +28 volts to the supply reel motor drivers to disable the drivers. (5) 12, 4 open to remove +28 volts to J3-15.

5-30. EDITING. The editing circuit is used on 1, 2, and 4 track recorders, and the MUTE DEFEAT on 8, 16, and 24 track. The edit mode can be initiated only in the stop or modes since the base of Q38 is at ground potential at the junction of R54, R56, by the following: (1) If in record, Q9 conducts, providing ground through CR26. (2) If in forward, Q17 conducts providing ground through CR24. (3) If in rewind, Q13 conducts providing ground through CR23. The EDIT button (S4) is a "push on/push off" switch. In the on position, +28 volts from contacts 4 and 2 to J2-T turns on Q38. The edit relay K1 is energized and ground through Q38 and CR20 lights the edit lamp, and grounds the collector of Q50. K1 contacts provide the following: (1) 1, 9 open to remove +28 volts from the record logic Q10 and braking circuit Q20. (2) 9, 5 close to apply +28 volts to inhibit the forward and rewind transistors (Q41, Q42, Q43, Q44), inhibit the take-up motor through CR106, inhibit the tape lifter Q35, and turn on Q39 in the stop mode which provides holdback current to the supply reel motor. (3) 10, 2 open to open the circuit (J2-17 and R) between S7-3 and S8-2 so that forward or rewind cannot be initiated while in edit. (4) 11, 7 close to charge C1 so that when stop is initiated during edit, C1 will maintain Q28 and Q30 in conduction for a period determined by the RC time; the pucks will thus remain pulled in until the capstan stops. (5) 12, 8 close to provide a high level to the base of Q38 if the edit button is pressed while in the play mode. When in edit and the stop button is pressed to stop tape motion, Q39 is turned on by the plus voltage applied to the base from R59. The emitter of Q39 is tied to the stop buss ground and the collector connected to R62 and R63 and to the forward reed switch. The series resistive network is connected through CR84 to the forward drive (supply motor) CR75. At the same time, Q40 is turned on by the same plus voltage at R59 to shunt out R100. The supply motor then

develops torque in the stop mode determined by the adjustment of R63. To terminate the edit mode, the edit switch must be pressed to the off position, then the stop button pressed to initiate stop; stop can be initiated first, then the edit button pressed to the off position to deenergize K1.

5-30A. A MUTE DEFEAT control is used on 8, 16, and 24 track recorders. Muting of the reproduce and sync preamplifiers is controlled by the mute/mute defeat circuit, sync signals, and the forward and rewind flip-flops. See figure 5-2. When the MUTE DEFEAT switch, S4, is in the mute state (not illuminated), the collector of Q38, on the transport logic board, is high. If S4 is in the mute defeat state (illuminated), Q38 conducts, providing a low at the collector. The collectors of Q38 or Q50 drive Q1 on the master remote board. When Q50 is conducting, the low collector voltage prevents control by Q38. A low from the forward or rewind flip-flops, or from the tape lifter circuit, ensures non-conduction of Q50, permitting mute defeat only during rewind or forward modes. Q1 is normally conducting due to current through R2 and R3. The collector voltage of approximately 6 volts is applied to pin 9 of IC1-C, making pin 8 high. This high keeps Q35 turned off, muting the reproduce preamplifier. A low from Q38 (mute defeat) or Q50 (not rewind or forward) turns Q1 off, allowing the collector voltage to go high. Actuation of the tape lifter switch will also turn Q1 off. The high from the collector of Q1 turns on Q35 through IC1-C defeating the muting of the reproduce signal. The sync circuitry normally maintains a low at pin 13 of IC1-D, resulting in a high to Q34 and muting the sync preamplifier. A high sync signal applied to pin 13 of IC1-D makes its output low, turning on Q34 and connecting the sync preamplifier to the monitor amplifier. The output of IC1-D applied to pin 10 of IC1-C maintains IC1-C pin 8 output high, muting the reproduce amplifier. During mute and the absence of a sync signal, the IC1-C/IC1-D flip-flop is forced to provide a high at both outputs.

5-31. **FAIL-SAFE.** Fail-safe relay K4 stops the recorder in the event of a malfunction in the stop, play, rewind, forward modes, and power failures. When power is applied, the stop, play, rewind, and forward busses are high at CR79, CR78, CR77, and CR76, respectively, to hold Q37 at cutoff and relay K4 deenergized. To energize K4, the transport stop switch S5 is pressed to apply ground at CR79 through R148 to turn on Q37. Contacts 9, 1 and 10, 2 open to remove the reel motor shorts, and 12, 4 open to remove ground. Contacts 11, 7 close to provide continuity between switches S5-3 and S6-2 (J1-S and J1-12). If all inputs to the base of Q37 are high (or loss of power), K4 deenergizes. Contacts 12, 4 apply ground to indicate a stop mode. Contacts 11, 7 open and the transport stop switch (S5) only can initiate standby mode. Contacts 10, 2 and 9,1 short the reel drive motors.

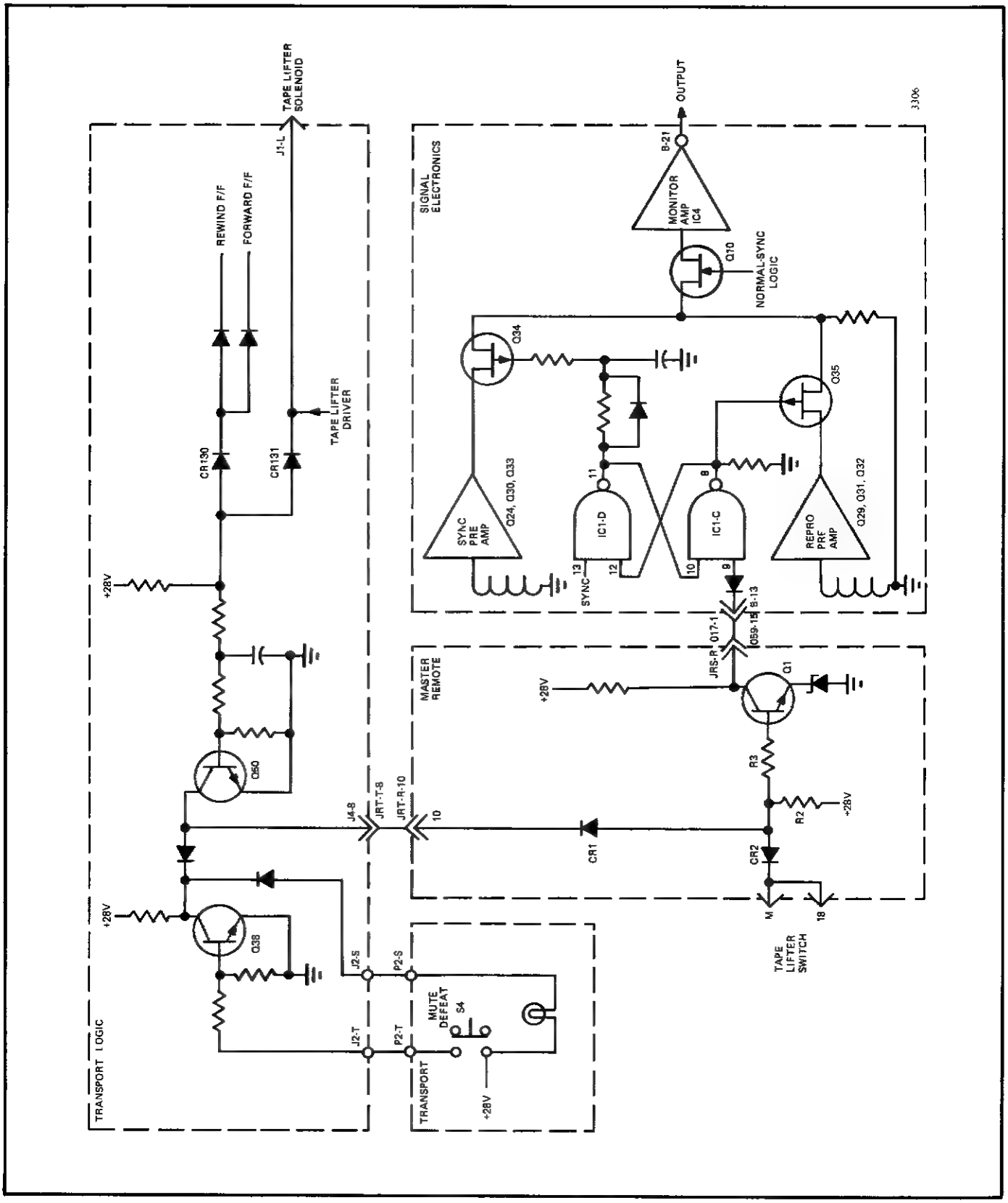

Figure 5-2. Mute Defeat Circuit

5-32. **CAPSTAN SPEED SWITCH.** The capstan speed switch S3 (see figure 6-1) has 5 positions (VAR LOW, VAR HI, LOW, HIGH, EXT). Section 3A provides ground to set and reset a flip-flop in the signal electronics which connects the appropriate equalizers in the signal electronics for high and low speeds, and connects the low speed equalizer EXT. Section 3B provides ground as follows: VAR LOW or HI positions energize the variable lamp DS2, and selects low and high speed equalizers, respectively. LOW position connects the proper speed resistive network in the capstan servo, and HIGH position connects the proper resistive network in the capstan servo. Section 3C connects the variable speed potentiometer R2 in the VAR LOW or HI positions, and an external input when in the EXT position.

NOTE

The VAR LOW and VAR HI are in 8, 16, and 24 track recorders.

5-33. **RELAYS.** Four relays (edit K1, play K2, cutout K3, and fail-safe K4) are used in the transport logic circuitry, and one in the signal electronic boards. The operation of the relays are discussed in paragraphs of this section relating to edit, play, tape runout, fail-safe, and cue preamplifier.

NOTE

The edit relay K1 is in 1, 2, and 4 track recorders.

5-34. **BIAS OSCILLATOR.** The bias oscillator is a free running multivibrator consisting of Q48, Q51 and transformer T1. The frequency is adjusted by setting C24 for 234 kHz. The output at the secondary contains a dc regulator control circuit (CR128, L1, and C27) which corrects the amplitude of the output for changing loads since from 1 to 24 channels can be turned on. The dc level at C27 controls the base of Q49. If the level drops, Q49 conducts more which causes Q48 and Q51 to have higher outputs. If the dc level increases due to high amplitudes of the oscillator output, Q49 will lower the amplitude of Q48 and Q51.

5-35. **CAPSTAN SERVO**

5-36. The capstan servo (see figures 6-2 and 6-5) consists of input transformer T1, operational amplifier IC1A, shaping circuit IC2 and C4, NOR gate and flip-flop of IC3, pulse detector C5, dc operational amplifier IC1B, programmable unijunction CR1, driver Q4, emitter followers Q5 and Q6, and a +5 volts regulator IC4. The capstan servo run and stop conditions are controlled by three signals from the logic board: (1) pin 9 is grounded for start by Q26 in the logic board, and +28 volts applied through a 22K resistor and a diode for stop, (2) the connector to pin 14 is open for start, and grounded for stop by transistor Q27 in the logic board, and (3) pin 17 is open for start, and +28 volts applied from the logic board relay K2 for stop.

5-37. **CAPSTAN RUN** (see figures 6-2 and 6-3). Run is initiated with the capstan speed switch S3 set to any position, and by pressing the play switch (S6) which energizes play relay K2 removing +28 volts at the servo board pin 17 by opening contacts 10,2. K2 causes two transistors (Q26 and Q27) to change state. Q26 applies ground from J2-15 to pin 9 while Q27 removes ground at pin 14 from J2-16. The servo is placed in the run condition as follows, see figure 5-2: The flip-flop of IC3 (pins 1 through 7) may be either in the set or reset state. If in the set state, C11 charges and unijunction CR1 avalanches producing a sharp positive voltage at the cathode resistor R27 which resets the flip-flop. During this initial period when the tach signal is absent, CR1 operates as a conventional relaxation oscillator, and the flip-flop remains in the reset state. The pulse detector C5, which has charged through R8 and Q1, remains charged in a high state. The dc signal is amplified by the dc operational amplifier IC1 (pins 8-9-13) which accelerates the motor under full power. The tach signal is coupled by step-up T1 to operational amplifier IC1 pins 5 and 6; the output at IC1-1 is a square wave. The square wave is differentiated by the shaping circuit IC2 and C4. The positive portion of the differentiated signal at IC2-14 sets the flip-flop at pin 4, and turns on switch Q3 to discharge C11. The flip-flop, however, is reset at a precise time determined by the RC network of CR1 since C11 is permitted a natural charge time. The flip-flop is thus reset longer than set, and C5 will charge through R8 and Q1 to a higher potential causing the motor to increase speed. When the tach rate and the pulse output rate of CR1 are the same, C5 is charged to an average level to maintain the motor at a constant speed. Q1 is turned on and off by a positive pulse out of the flip-flop pin 2 via the NOR gate so that at pin 13 the pulses are positive. The width of the pulses determines the charge of C5.

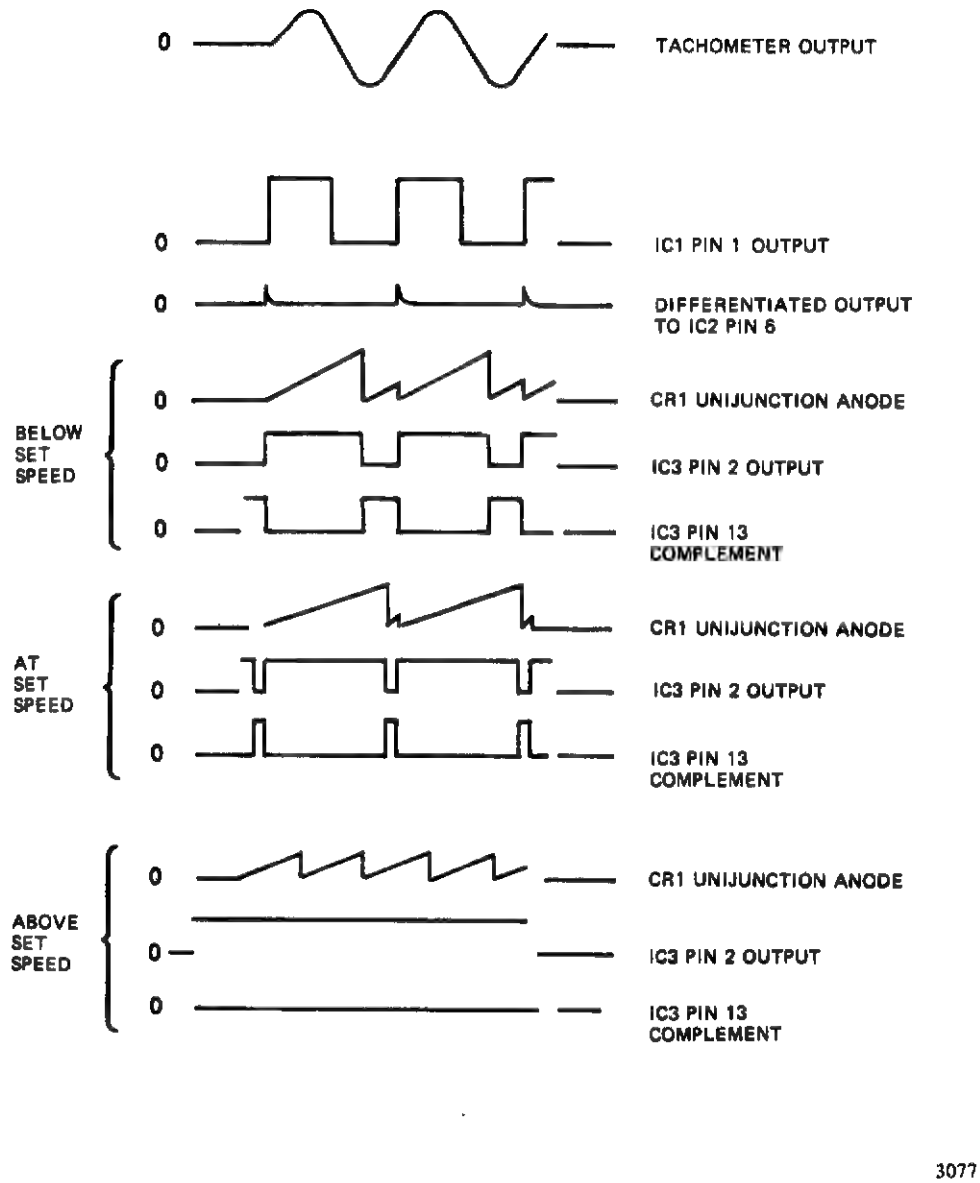

Figure 5-3. Capstan Servo Pulse Generation Sequence

C5 discharges through R50 and Q2; Q2 is turned on and off by IC2 pin 13. Unijunction CR1 timing is varied for the various speeds by the resistance networks, R37 and R41 for 30 ips, R38 and R42 for 15 ips, R39 and R43 for 7.5 ips. For 15 and 30 ips recorders, R39 and R43 are not connected; for 7-1/2 and 15 ips recorders, R37 and R41 are not connected. The 30 ips and 15 ips, or 15 ips and 7.5 ips networks are grounded by the capstan speed switch. The VAR input is connected to the variable speed potentiometer or to an external source if used. Temperature compensation is provided by CR2 and R29.

5-38. CAPSTAN STOP. The capstan is stopped when the stop switch is pressed as follows: (a) ground is removed and a plus voltage is applied at pin 9 cutting off Q1 and C5 discharges, (b) ground is applied to pin 14 and grounds the output of IC1-13. Q4 and Q6 turn off to shut off the motor, and Q5 turns on to apply a back EMF when the speed is changed from high to low. (c) +28 volts is applied to pin 17 to brake the motor to a quick stop.

5-39. DC AMPLIFIER AND OUTPUT TRANSISTORS. The dc amplifier utilizes 1/2 of IC1 pins 8, 9, and 13, and drives the output stages Q4 and Q6. One input of IC1 pin 8 is supplied from a dc potential divider (R11, R12, R13, and R14). The other input pin 9 is taken from the pulse width discriminator output filter through R10 and R16. The resulting differential is amplified so that a large dc current level is available at pin 13 to energize the motor. Current feedback is obtained by a low value resistor (R45) effectively in series with the motor. The resulting voltage is fed back through R17, C7, and R18, reducing the overall gain to a convenient value. Two other feedback paths are used; one being conventional negative feedback through R22, R20, and C8, and feedback via R51. A reference tracking voltage is derived from the programmable unijunction transistor gate control potential through R19, R15, R12, R13, and R18. This offset voltage ensures optimum control pulse width over the complete speed range. The operating point chosen for the amplifier is critical for successful operation of the servo because the resulting charge potential on capacitor C11 depends on the pulse width available from the flip-flop circuit of IC3 and the charge/discharge characteristics of the pulse width discriminator network of C5. Q4 amplifies the output of IC1-13 and drives two output transistors Q5 and Q6 in complementary symmetry configuration. Q6 controls the motor drive current, while Q5 does the braking when slowing to a lower speed, or to a stop condition using the back EMF of the motor.

5-40. +5 VOLT REGULATOR. Regulated +5 volts supplied to IC2 and IC3 is provided by voltage regulator IC4 and circuitry.

5-41. SUPPLY AND TAKE-UP MOTOR CIRCUITRY

5-42. The supply and take-up motor circuitry consists of the motor drivers (figures 6-4 and 6-5), and control circuitry on the logic and bias oscillator board (figure 6-2). The motor driver interfacing circuitry in the play and stop modes consists of CR104 through CR114, R150 through R161, standby (stop) tension (Q22, Q23), and play tension (Q24, Q25). Forward and rewind circuitry (see paragraph 5-24) provide additional control in the respective modes including a forward/rewind braking circuit (Q20, Q21, and CR1).

5-43. MOTOR DRIVERS. The motor drivers Q1 through Q9 control the current through the take-up and supply reel drive motors. The interfacing circuitry determines the amount of current for stop, play, forward and rewind modes, and braking for slowing down and stopping in the forward and rewind modes. Since the supply and take-up motor circuits are similar, only the supply motor circuits are described.

5-44. Supply Motor Circuitry and Reed Switches. Directly beneath the supply reel hub (see figure 4-2) on the supply motor shaft is mounted a ball bearing. The outer race of this bearing is not rigidly mounted, but is centered in a light-weight vane. The vane would rotate with the take-up motor shaft but is prevented from doing so by two posts. The vane rests against one post when the motor turns in one direction and shifts through an angle of about 15 degrees to rest against the other post when the motor turns in the other direction. The vane carries a small magnet which causes operation of the forward reed switch when the motor runs in the forward direction. The forward switch is released and the rewind switch is caused to close when the motor turns in the reverse direction. The supply motor is controlled by Q6, Q7, Q8, and Q9. Base control of Q8 from the stop and play logic circuitry determines the amount of conduction of Q8 which controls Q7. The collector of Q7 is connected to

+28 volts through R2, and the emitter connected to the (+) terminal (blk lead) of the supply motor. The (-) terminal (red lead) of the motor is connected to the take-up motor (blk) lead, to the collector of Q5, and to resistors R4, R5. In the no torque condition of the motor, Q8 is at cutoff since the stop and play logic circuits are open and the +28 volts at R156 holds Q8 at cutoff which holds Q7 at cutoff; the motor current is zero and the motor has no torque. When the stop switch (S5) is pressed to initiate standby, a resistor network connected to ground by transistors Q22 and Q23 changes the bias on the base of Q8. Q8 conducts and turns on Q7 to provide current for standby torque of the supply motor. Q23 conducts for a short time, determined by the charge of C6, to increase current through Q7 and increase motor torque until C6 charges to a sufficient level to cut off Q23; normal standby torque is then provided by R75 which is used to adjust standby tension. When the play switch (S6) is pressed, the stop resistor network is removed from ground, and the play resistor network (Q24, Q25) is connected to ground. The play resistor network (R86) is lower in resistance causing Q8 and Q7 to conduct more providing more current to the motor. Q25 and C8 provide the same function as Q23 and C6. Transistor Q9 provides temperature compensation for Q8. Transistor Q6 compensates for differences in reel inertia when the reel balance switch (S2) is set to one of three positions, and provides reverse current when shifting from rewind to forward. The switch (S2) connects the collector of Q6 to the collector of Q4 and to tape pushout adjustment R6 and CR1. The switch positions change the gain between the take-up and supply motor drivers. In start up, the supply motor current flow is from ground through R5, R4 to common, through the motor to Q7 emitter, collector of Q7 to R2 and +28 volts. At the same time, current through the take-up motor causes the take-up motor to rotate in the direction to take up tape. Braking the supply motor is as follows when going from play to stop: (1) In play, the tape tension resistors R85 and R86 are opened by Q24 and +28 volts at R156 cuts off Q8 which causes Q7 to cut off. The supply motor current is thus cut off and the motor applies dynamic braking by the back EMF. (2) At the end of tape, K3 energizes and contacts 11, 7 close to initiate the stop command; contacts 6, 10 and 5, 9 close and short out the supply motor. (3) If a fail-safe occurs, K4 deenergizes, contacts 4, 12 close to apply ground and initiate the stop command; contacts 6, 10 and 5, 9 close to short out the supply motor. When the edit relay is energized to initiate the edit command, contacts 9, 5 close to apply +28 volts through CR106 to cut off Q2 which cuts off Q3 and deenergize the take-up motor. The +28 volts is also supplied to cut off Q41 and Q43 and turn on Q40 so that the supply motor operates in the play mode tension modified by Q40 shunting R100. In the forward or rewind modes, the motor driver and control signals are modified by the forward and rewind circuitry (μA741, and transistor Q41 through Q46). When shifting from rewind to forward mode, the current through the supply motor is reversed to initially runout tape since Q8 is cut off and Q6 turned on by the low level at the collector of Q44 applied through CR112 and R160. Current from ground through CR1, R6, reel balance switch S2, to the collector of Q6, the emitter of Q6, to the supply motor causes reverse rotation of the motor. As the take-up motor increases speed, the supply motor + terminal decreases and the motor stops playing out tape. The supply motor then develops a back EMF to cut off Q6 and normal hold back torque is developed. Q5 limits the terminal velocity of the trailing motor (supply). The back EMF passes through CR111 through Q5 and is in shunt with the supply motor. Forward to rewind mode is similar except Q4 provides reverse current to the take-up motor.

5-45. REMOTE CONTROL ASSEMBLY

5-46. The remote control assembly contains three sets of switches which are: (1) remote transport control, (2) master signal electronics including a flasher circuit, a record indicator and a runout indicator, and (3) function assembly. The switches and associated circuitry command the transport tape motion, the signal electronics to operate in record, normal (reproduce), or cue, and the monitoring circuits for IN or OUT operation. The flasher indicates a record malfunction by controlling the record lamps brightness alternately from dim to bright. A mute circuit is also included to prevent audible signals in the forward or rewind modes.

5-47. **REMOTE TRANSPORT CONTROL SWITCHES.** The remote transport control switches (figure 6-7) consist of stop, play, record, rewind, and forward pushbuttons, and a tape lifter switch. All of the pushbuttons are connected in parallel with, and perform the same functions as, the identical transport pushbuttons. The stop pushbutton is different in one respect. When the recorder is in a fail-safe or

tape runout condition or power first applied, only the transport stop pushbutton is able to set the recorder in standby since the remote stop pushbutton is disconnected by contacts 2 and 11 of the fail-safe relay K4. The transport stop pushbutton is connected to the operational ground at K3 contacts 11 and 3, and can initiate standby when K3 is deenergized.

5-48. **Tape Lifter Switch.** The unlabeled tape lifter switch S10 (located adjacent to the remote pushbuttons) is a three position normally off in the center position. When the right side of the switch is pressed down and the recorder is in rewind or forward, ground is applied to pin S connected to thr tape logic transistor Q36. Transistor Q36 is cut off and deenergizes the tape lifter solenoid which releases the tape lifters when the left side of the switch is pressed down. The tape lifter switch also disables the mute circuit of Q1 in the remote mode control, see figure 6-11.

NOTE

In forward or rewind, if a jumper is connected from E5 to S10-1 in figure 6-11, +28 volts is applied through R14 to E3 and the emitter of Q10 which is turned on by the rewind or forward low level at the base. Approximately +12 volts at pin R is applied to the signal electronics SM input pin B-15. The signal electronics is commanded to shift from normal mode to the cue mode. The record head becomes the playback head with an increase in playback level during the reeling modes. Normally cue cannot be initiated in the forward or rewind mode since Q50 in the logic circuitry is inhibited by the high forward or rewind buss. The input to the master sync pin L is high from Q50 to inhibit Q1, resulting in a low at pin 8 which is normal playback level to the signal electronics logic.

5-49. **MASTER SIGNAL ELECTRONICS SWITCHES.** The master signal electronic switches (figure 6-7) consist of a red RECORD, green CUE, white IN, and amber OUT pushbuttons, and control the indicated commands to the signal electronics, when pressed. The RECORD and CUE pushbuttons are backlighted and remain in when in that mode.

5-50. **Record Pushbutton.** When the RECORD pushbutton is pressed and the transport record command is initiated, ground from pin V is applied by S4 through CR4 and R5 to turn on Q2. The record lamp DS4 lights, and Q3 turns on to provide +25 volts to the master record buss at pin 2 so that record can be initiated at the individual channel pushbutton. Ground through Q2 is applied to activate the flasher circuit (Q6, Q7) if connected to the collector of Q2 (otherwise, ground is permanently connected to the flasher as an option). Switch S4 also applies ground through CR1 and R1 to turn on Q1 which applies +15 volts to the master sync buss at pin 8, and turns on Q4. Q4 provides ground to light the cue lamp DS3, and turns on Q5 which provides +25 volts to the sync lamp buss at pin 3. Diodes CR12 and CR15 are dividers used to drop the +28 volts at pin P to +25 volts.

5-51. **Cue Pushbutton.** When the recorder is not in the record mode and Q3 is at cutoff, pressing the CUE switch S3 applies ground (in play, edit, or stop) to the base of Q1. Q1 turns on to provide: (1) +15 volts through CR3 to pin 2, (2) +15 volts to the master sync buss at pin 8, and (3) +15 volts to turn on Q4 which provides ground to turn on the cue lamp DS3. Q5 also turns on to provide +25 volts to the sync lamp buss at pin 3. If the cue switch S3 is pressed, when in record, CR3 is back-biased by the +25 volts from Q3. In rewind and forward, the input to pin L is at a high level from the logic and bias board transistor Q50 so that cue cannot be initiated in forward or rewind. See the note at the end of paragraph 5-48.

NOTE

If none of the master IN and OUT, and the individual "in" and "out" pushbuttons are pressed, monitoring will be selected automatically by the signal electronics logic circuitry.

5-52. **IN Pushbutton.** The IN pushbutton is not backlighted when pressed, instead DS2 is used as a RUNOUT indicator. When pressed, the IN switch S2 provides ground to the master A (IN) buss at pin K, and removes the +25 volts at pin 18 to disable the individual channel white "out" pushbuttons. All record channels will monitor the input signal.

5-53. **OUT Pushbutton.** The OUT pushbutton is not backlighted when pressed, instead DS1 is used

as a RECORD indicator. When pressed, the out switch S1 grounds the B (OUT) master buss at pin B, removes ground from the A buss at pin 9, and overrides the IN switch S2 by opening ground. All reproduce channels will monitor the reproduce output signals.

5-54. **Flasher Circuit.** The flasher circuit consists of a free running multivibrator Q6, Q7, and buffer Q8. Resistors R7 and R10 are normally connected to the emitter of Q2. A jumper can be connected to ground from the junction of R7 and R10 which would cause the free running multivibrator to operate at all times. Connected to the junction of CR1 and CR4, the flasher operates free running only when the record command is initiated. The on/off time of Q6 and Q7 is determined by the RC time of C1 and C2 with the respective resistors. The output from Q7 is fed to a buffer stage Q8 which turns on and off at the flasher rate, alternately applying +25 and +0 volts to CR7. However, in record, the flasher buss voltage at pin 6 is also +25 volts and the flasher buss remains a steady +25 volts. If the flasher buss drops below 25 volts, the individual red record button(s) and the RECORD indicator DS1 alternately flash between dim and bright.

5-55. **Record Indicator.** The record indicator DS1 is located in the OUT pushbutton for convenience and is not an OUT monitor function. The indicator lights when any individual channel red record button is pressed by turning on Q9. The indicator is a visual indication that the recorder is in a standby record condition. When recording commences, the flasher buss at pin 6 raises to a +25 volt level and turns off Q9 which turns off DS1. If the flasher buss at pin 6 drops to +15 volts, Q9 will turn on and off at the flasher rate and DS1 will flash on and off.

5-56. **Runout Indicator.** The runout indicator DS2 is located in the IN pushbutton for convenience and is not an IN monitor function. When tape runs out or breaks, cutout relay K3 contacts 7 and 11 close and apply ground to pin E and DS2 lights. When tape is threaded, contacts 7 and 11 open and DS2 extinguishes.

5-57. **FUNCTION ASSEMBLY SWITCHES.** The function switch assembly (figure 6-6) contains four switches and indicators for each channel consisting of red for RECORD, green for CUE, white for IN, and amber for OUT. Each set of four is numbered according to the channel number being controlled.

5-58. **Record Switch.** When pressed, the individual red record pushbutton backlights dimly an an indication that a channel has been set to record. +15 volts is supplied from the flasher buss pin 4 and ground by the switch. The green cue lamp also lights dimly since ground is applied through CR9 and +15 volts from pin 3 through CR3. When recording commences, +25 volts at the master record buss pin 1 is connected through the switch, CR5 to the emitter of Q1, and through R2 to pin 14 which is the channel record command to the decoder in the signal electronics; a bias resistor (R3) in the decoder connected to R2 provides bias to turn on Q1. Q1 applies +25 volts to brighten the record pushbutton lamp DS4, and provides +25 volts to the flasher buss. The +25 volts flasher buss causes Q9 to turn off, and the +25 volts through Q9 is removed extinguishing the record lamp DS1.

5-59. **Cue Switch.** When the cue switch is pressed, and the record switch not closed, the cue lamp is lighted dimly by the +15 volts at pin 3, +15 volts is applied at pin 6 through CR6 and R2 to pin 14 which sets the signal electronics channel in the cue mode. Q2 also turns on and the increase in voltage brightens the cue lamp since the sync lamp buss voltage at pin 2 is +25 volts when the master record S4 or cue S3 is closed. In the event the channel is selected for record and the cue switch closed, the +25 volts at CR5 back-biases CR6 so that cue cannot be initiated while in record.

NOTE

The individual channel in and out switches are disabled if either the master "in" or "out" button is disabled.

5-60. **IN Switch.** When the white "in" button is pressed, ground at pin 8 cuts off Q4, and Q3 turns on to light the "in" lamp (either +17 volts or +25 volts is applied at pin 9 determined by a jumper placement in the master signal electronics switches). Ground through the closed contacts of the out switch is connected to pin 15 which is the signal electronics IN (A) command. The "in" switch is overridden by the individual amber "out" button.

5-61. **OUT Switch.** The amber "out" switch overrides the white "in" switch and when pressed, +25 volts at pin 13 turns on Q4. The amber "out" lamp lights (either +17 or +25 volts pin 9 same as the "in" switch). The signal electronics OUT (B)

command at pin 15 is +25 volts. When power is first applied to the recorder and none of the buttons are pressed, the "out" lamps on all channel will normally light because the voltage level at A-B command pin 15 will be positive from the signal electronics turning on Q4. Under some conditions, pin 15 could be at ground which will light the "in" lamps on all channels.

5-62. SIGNAL ELECTRONICS

5-63. The signal electronics circuitry (see figures 5-4, 5-5, and 6-12) is contained on one printed circuit board and consists of a decoder circuitry for record, reproduce, cue, monitor, and speed logic, bias and erase amplifiers, line amplifier, cue preamplifier, reproduce preamplifier, record amplifier, two equalizers each for the reproduce and cue preamplifiers, and two equalizers for the record amplifier.

5-64. DECODER. The decoder consists of IC5 and associated circuitry. The outputs of the decoder control the set and reset states of the record, reproduce, cue, and monitor logic flip-flops IC1-C, D and IC2-A, B, C, D. The decoder outputs are determined by the inputs at B-15 and B-18. The SM (sync master) input at B-15 is normally 0 volts and does not affect operation of the decoder, but in forward or rewind modes with the TAPE LIFTER switch pressed to the left, +12V is applied to change the decoder output and the signal electronics will be commanded to playback on a record head. The nominal input levels, normal, sync, record (NSR) at B-18 are 0V, +15V, and +25V. The voltage levels are fed from the function switch assembly pin 14 and command the decoder to select normal, cue (sync), or record, respectively.

5-65. Normal Decode. Normal decode corresponds to the reproduce mode and is selected when the play button is pressed for playback operation. The level at B-18 is nominally 0 volts and the second transistor of IC5 remains at cutoff to hold pins 1 and 6 at a high level. IC5 pin 6 at a high level turns on the third transistor for a low level at IC2 pin 1 to reset IC2 for a high level at pin 3 and a low level at pin 6. The level at IC5 pin 9 is low after C30 discharges turning off the fourth transistor for a high level at pins 11 and 12 which turns on the fifth transistor for a low level at IC5 pin 14 and IC1 pin 13 to set IC1 for a high level at pin 11 and a low at pin 8. See reproduce logic in paragraph 5-70 for operation of the normal reproduce circuitry.

5-66. Record Decode. The level at B-18 in the record mode is nominally +25 volts which turns on the second transistor connected to pin 2 of IC5. The second transistor collector pin 1 resets the levels of IC2 pin 6 high, pin 3 low, and causes the third transistor to cut off; pin 8 at a high level causes C30 to charge. After C30 charges, a low level at IC5 pin 9 cuts off the fourth transistor for a high level at IC5 pins 11 and 12 which turns on the fifth transistor. The level at IC1 pin 13 is low to set IC1 pin 11 high and pin 8 low. When IC2 pin 6 is at a high level in the record mode, the bias and erase signal enters the bias and erase amplifiers, and the first transistor of IC5 is turned on by a plus voltage developed by C15 and CR12. R3 is grounded and provides bias to operate transistor Q1 in the remote function switch assembly. See record logic in paragraph 5-69 for operation of the record circuitry.

5-67. Sync (Cue) Decode. The level at B-18 in the cue mode is nominally +15 volts, which turns on the fourth transistor of IC5, but is not sufficiently high to turn on the second decode transistor (record command). The low collector voltage of the conducting fourth transistor (CI5) turns the fifth transistor off, and also applies a low to pin 9 of IC1-C which causes pin 8 of IC1-C to go high, and pin 11 of IC1-D to go low. A high at pin 8 (IC1-C) cuts off FET switch Q35 (reproduce). The low at pin 11 turns on FET switch Q34 allowing the signal from the cue amplifier to pass to the monitor amplifier. If the record mode is operative prior to switching into the cue mode, the fourth transistor of IC5 is inhibited for approximately one half second by the transfer of charge in C30. This allows the bias amplitude on the record head to fully decay, and the cue preamplifier to stabilize after the clamp is removed from CR15. See cue logic in paragraph 5-71 for operation of the cue circuitry.

5-68. RECORD, REPRODUCE, CUE, AND MONITOR LOGIC. The record, reproduce, cue, and monitor logic commands are switches by three flip-flops, IC1-C, D, IC2-A, B and IC2-C, D. The set and reset command levels are provided by the decoder IC5 outputs and the monitor inputs at B-3, B-4, and B-5.

5-69. Record Logic. The output levels from IC5 are as described in paragraph 5-66 with the output level of IC2 pin 3 low which: (1) gates FET Q23 to connect the record amplifier output at E29 with

L3 and C25, and to the record head input at A-18, and (2) clamps CR15 to ground through R67 and short the cue preamplifier output. If not manually selected at B-3, B-4, and B-5, a pulse through C3 to IC2 pin 13 resets the level at IC2 pin 8 low; pin 8 at a low level, gates FET Q11 which connects the record input signal from R62 to the line amplifier IC4 pin 5; the low level at pin 12 connects through CR6 to B-3, to the remote control assembly. The low level causes the white "in" button to illuminate automatically. IC2 pin 6 at a high level turns on Q7 which turns on Q8. The +15 volts through Q8 turns on the lamp in VTL1A4, and permits the bias and erase levels to be applied to the bias and erase amplifiers. The levels of IC1 are set so that pin 8 is low and pin 11 high. The low level at pin 8 maintains Q36 at cutoff so that relay K1 does not energize, and pin 11 at a high level inhibits Q34.

NOTE

Capacitive coupling by C1 and C3 allows rapid changes at IC2 pins 3 and 6 (+15 volts to 0 volt) to pull down the inputs at IC2 pins 13 and 9, respectively, so that pins 13 and 9 are not controlled by the steady state conditions. The 220K resistors ensure that C1 and C3 are always returned to the discharge state.

5-70. **Reproduce Logic.** The output levels from IC5 are as described in paragraph 5-65 with the output levels at IC2 pin 3 high and pin 6 low which: (1) turns off the record signal at Q23, (2) sets IC2 pin 11 low by a pulse from C1 to gate Q10 (if not set at B-3, 4, or 5), the high level at pin 12 connects through CR6 to B-3, to the remote control assembly. The high level causes the amber "out" button to illuminate automatically. The level at IC2 pin 6 low also cuts off Q7 which cuts off Q8; the lamp in VTL1A3 goes out and disables the oscillator input to the bias and erase amplifiers. The decoder sets the levels of IC1 pin 8 low and pin 11 high. The level at pin 8 low gates FET Q35 to connect the reproduce preamplifier output from R118 through Q10 to IC4 pin 5. Pin 11 at a high level disables FET Q34 to assure that there is no output from the cue preamplifier.

5-71. **Cue Logic.** The cue logic from the decoder sets IC2 pin 3 high and pin 6 low to accomplish the same as for the reproduce logic. The decoder, however, sets IC1 so that the level at pin 8 is high and pin 11 low. The high level at pin 8 turns on Q36 to energize K1 which connects the record head input at A-18 through contacts 4 and 3 to T3, the cue preamplifier input. Pin 8 also inhibits Q35 to block the reproduce preamplifier output. The low level at pin 11 gates Q34 to connect the cue preamplifier output from R111 through Q10 to line amplifier input IC4 pin 5.

5-72. **Monitor Logic.** The "in" and "out" monitor commands are controlled by IC2-C, D which follows the automatic commands from pins 3 and 6 of IC2 if the inputs at B-3, B-4, and B-5 are open. As explained in the note between paragraphs 5-69 and 5-70, the automatic commands to IC2 pins 9 and 13 are pulsed by capacitors C1 and C3. The low levels at pin 8 and 11 command the gates of Q11 and Q10 which monitor "in" and "out", respectively. In automatic, when the level at pin 8 and 12 is high, a positive voltage at CR6 is connected at B-3 to light the "out" amber lamp in the remote control assembly; when the level at pin 8 and 12 is low, the feedback at B-3 causes the "in" white lamp to light. Automatic is overridden when any of the inputs at B-3, B-4, and B-5 are activated by the remote control unit monitor switches. If the input level at B-5 is low, Q11 is gated; low level at B-4, Q10 is gated. The input level at B-3 is low for "in" and high for "out". Only one input is activated at B-3, B-4, and B-5 determined by the position of the remote switches. B-4 and B-5 are at a low level when activated, but B-3 is at a low level for monitoring "in" and at +25 volts when monitoring "out". The high level turns on Q6 which provides a low level to IC2 pin 10.

5-73. **SPEED SELECT LOGIC.** The speed select logic is controlled by IC1-A, B. The inputs $\overline{L}$ and $\overline{H}$ at B-9 and B-11 are connected to the capstan speed switch. The capstan speed switch applies ground when either a low or high speed is selected. (When in EXT, either LOW or HI equalizers can be selected depending on the wiring of the capstan speed switch.) A low input level at B-9 sets the level of IC1 pin 6 low which: (1) gates Q19 to connect equalizer C21 and R50 for low speed preemphasis corrections to the record amplifier, and (2) gates Q25 and Q27 to connect the low speed equalizers to the cue and reproduce preamplifiers. Normally for 15-30 ips recorders, a jumper is connected from E10 to E13. Pin 6 of IC1 at a high level turns on Q9 to gate Q20 which shorts C23 and modifies frequency response; if a jumper is connected to E10 and E11, Q20 is inhibited at all times and C23 remains in the circuit.

When the capstan speed switch grounds the high speed input at B-11, IC1 pin 3 level is low which: (1) gates Q18 to connect C19 and R48 for high speed preemphasis to the record amplifier, and (2) gates Q26 and Q28 to connect the high speed equalizers. The high level at pin 6 inhibits the low speed gates Q19, Q25, and Q27.

5-74. BIAS AND ERASE AMPLIFIERS. The bias and erase amplifiers are energized in the record mode by the operation of R32, Q7 and Q8. A 234 kHz master bias oscillator signal enters all boards at A-1 and A-3. When not in record, the bias signal is attenuated by the increase in resistance of R32 because the photocell VTL1A3 lamp is extinguishing. In record, Q7 and Q8 are turned on by a high level at IC2-6; the lamp lights, and the resistance of R32 decreases so that the bias signal is across T1-1, 2.

5-75. Bias Amplifier. The bias signal is amplified by Q14 and Q15 to 20 volts peak-to-peak across the primary of T2-1, 3. T2 steps up the output to 50 volts peak-to-peak which is coupled through C51 to the tuned circuit of C25 and L3 where the record signal is mixed with the bias signal. L3 and C25 block the bias signal from the record amplifier, but permit the record signal to pass without loss. R121 is adjusted to set the erase level then R41 is adjusted to set the bias level.

5-76. Erase Amplifier. The bias signal at the secondary of T1 is amplified by Q16 and Q17 to 40 volts peak-to-peak. The transformer T4 steps up the 40 volts to 170 volts peak-to-peak, and coupled through C16 to the erase head output terminal A-5. The level at TP1 is set by R121 for 1.2 volts rms, and peaked by adjusting C14. If R121 is adjusted, R41 must be readjusted to set bias level. The output at the secondary of T4 is rectified by C15 and CR2 so that in the record mode, the first transistor in IC5 is turned on to ground R3 which provides a bias for the record command in the remote control assembly..

5-77. RECORD AMPLIFIER. The record amplifier consists of operational amplifier IC3, push-pull emitter followers Q21, Q22, output signal limiters VR2, VR3, olutput gate (FET Q23), high speed equalizer Q18, C19, and R48, and low speed equalizer Q19, C21 and R50. The input signal to be recorded is applied at A-11 to the record level adjustment R49, through C53 to operational amplifier IC3 pin 5. The reference input pin 4 of IC3 is connected to ground through R52 and C22. Feedback is provided through R56, R55, R54 and C23. C23 can be shorted out to modify frequency response, if desired, by gating Q20. The high frequencies are boosted by the two equalizers; Q18 is gated to connect C19, R48 for high speed, and Q19 is gated to connect C21, R58 for low speed. The degree of boost is determined by adjusting C19 and C21. Low frequency compensation is determined by the feedback through R54 and C23. The output of IC3-10 drives two emitter followers (Q21, Q22) biased at class B by CR13 and CR14. The output is limited by VR2 and VR3 to protect the record head, and prevent the head from being magnetized if excessive input signals or high transients are present when first turned on. When gated by a record low level from IC2-3, Q23 connects the output to the tuned circuit of L3 and C2, mixed with the bias signal, and applied to the record head at terminal A-18. The record input signal across R62 is connected to FET Q11, and can be amplified by the line amplifier for monitoring when in the record mode and Q11 is gated by a low from IC2-8.

5-78. REPRODUCE PREAMPLIFIER. The reproduce preamplifier consists of Q29, Q31, Q32, FET Q35, and two equalizers gated by Q27 and Q28. The reproduce head input is applied at B-7 with common grounded at B8. The signal is coupled through C33 and R79 to the base of Q29, amplified by Q29 and Q31, and the output from emitter follower Q32 coupled through C49 to the reproduce level adjustment R118. The output is equalized for two tape speeds selected by Q27 for low speed and by Q28 for high speed. When Q27 or Q28 is gated, feedback to Q29 emitter through the equalizer compensates for the preemphasis applied during the recording operation. The low frequencies (50 Hz) are adjusted by R103 or R104, the high frequencies (15 kHz) are adjusted by R115 or R116. R108 or R109 can be adjusted to peak at the high frequencies. The output from R118 is gated through Q35, when reproduce is selected by a low at IC1-8, and connected to Q10 of the line amplifier. Q10 is also gated low by IC2-11, when reproduce is selected, so that the line amplifier can amplify the reproduce signal for monitoring.

5-79. LINE AMPLIFIER. The line amplifier consists of FET switches Q10, Q11, operational amplifier IC4 and emitter followers Q12 and Q13. The line amplifier amplifies the record input signal, the

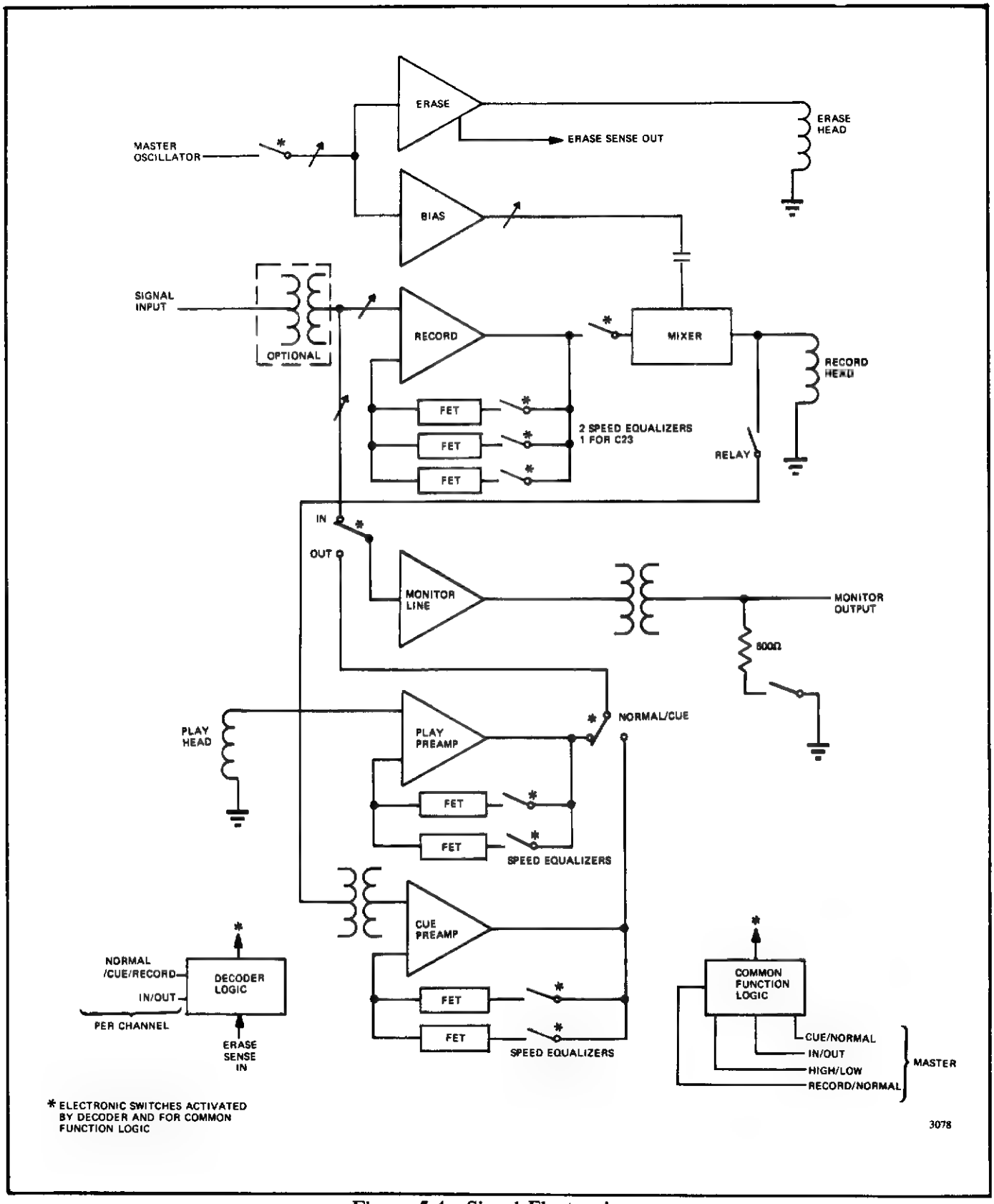

Figure 5-4. Signal Electronics

reproduce preamplifier output, or the cue preamplifier output. Q11 selects the record signal input, while Q10 selects either the reproduce preamplifier or the cue preamplifier outputs. The signals are amplified by IC4, and the output from Q12 and Q13, operated at class B bias determined by CR10 and CR11, is coupled through C9 to the output monitor pin B-21.

5-80. CUE PREAMPLIFIER. The cue preamplifier consists of T3, Q24, Q30, Q33, and FET Q34. Transistor Q36 and K1 are used to switch the signal, picked up from the record head, into the primary of T3. When the cue mode is selected, Q36 is turned on by a high level from IC1-8 which energizes K1 closing contacts 3 and 4. The prerecorded signal is picked up by the record head and connected from Q18 to the primary of T3. The bias signal from the bias amplifier is not present since the bias input is disabled by R32 in the cue mode. The signal is amplified by Q24 and Q30 and the output from the emitter follower Q33 is coupled by C44 to the sync level adjustment R111. The output signal is limited by CR16 and CR17. In the cue mode, FET Q34 is gated by a low level at IC1-11 to connect the output to line amplifier Q10. Equalization for low speed is provided by Q25, R106, R112 and R113, and by Q26, R102, R107, and R114 for high speed. Adjustments R102 and R112 adjust the low frequency (50 Hz) response, and R113 and R114 adjust the high frequency (15 kHz) response. R106 and R107 can be adjusted to peak at high frequencies.

5-81. POWER SUPPLY

5-82. The power supply unit is mounted internally on the bottom side of the recorder cabinet, and provides +28 volts, +17 volts and +15 volts to the recorder transport and signal electronics. For details of the power supply, see figure 6-17 through 6-24.

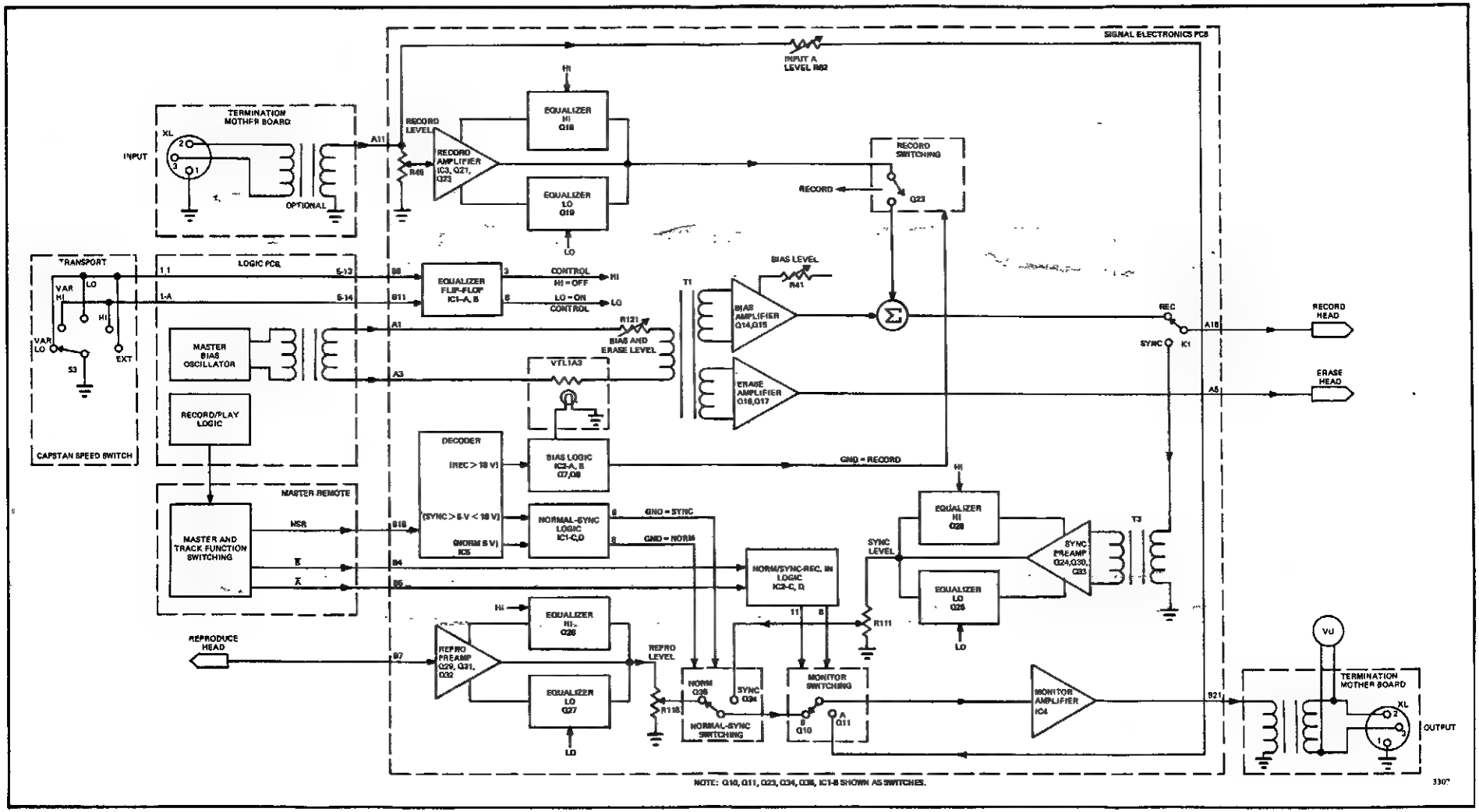

Figure 5-5. Signal Electronics Signal Flow Diagram

SECTION VI
SCHEMATICS

6-1. GENERAL

6-2. This section contains schematics and wiring diagrams for the 3M Brand Series 79 Recorder. The schematics and wiring diagrams are listed in table 6-1.

Table 6-1. List of Schematics

Figure No.	Title	Drawing No.
6-1	Composite Schematic	CE79000A700
6-2	Capstan Servo Assembly	E79011C000
6-3	Logic and Master Bias Supply	E79013D010
6-4	Motor Driver Assembly	E79013A030
6-5	Transport Function Diagram	CE79013A710
6-6	Function Switch Assembly	E79017A010
6-7	Master Control Assembly - Remote	E79017C030
6-8	Remote Cable	E79017B040
6-9	Electronics Remote Cable	E79017B045
6-10	Remote Mode Control Assembly, Transport Only	E79017A400
6-11	Remote Interconnections	CE79017A700
6-12	Signal Electronics	E79059F010
6-13	Reproduce Signal Electronics	E79059B020
6-14	Signal Electronics Composite	CE79059A700
6-15	Cabling Interconnections	Unnumbered
6-16	24 Track Head Set Assembly	E79119A100
6-17	Power Supply	79031A001-1 (P)
6-18	Power Supply	79031A001-2 (P)
6-19	Power Supply Module	A1-1
6-20	Power Supply Module	A2 and A3-1
6-21	Power Supply Module	A1-2
6-22	Power Supply Module	A3-2
6-23	Power Supply	79031A001-1 (C)
6-24	Power Supply	79031A001-2 (C)

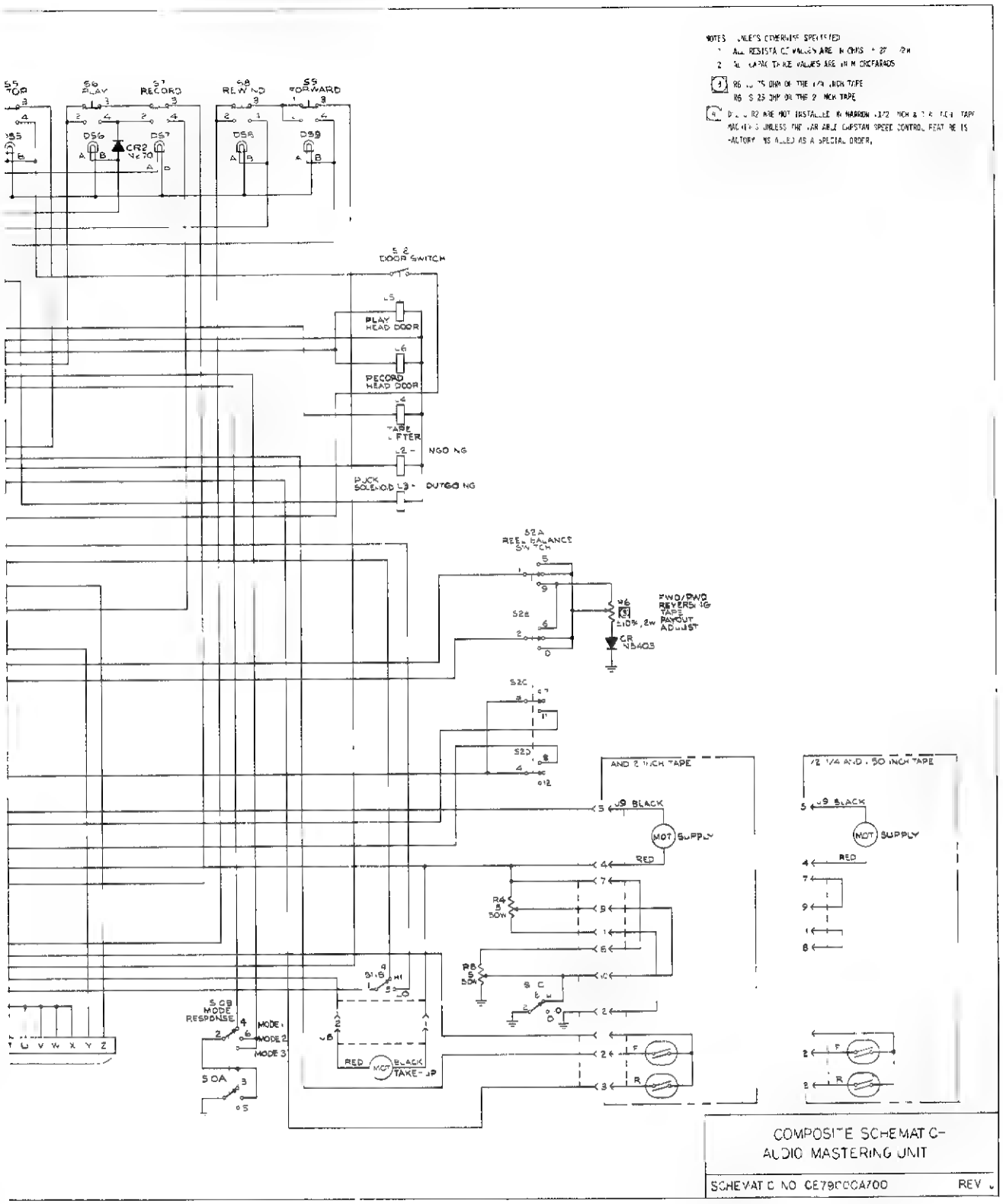

Figure 6-1. Composite Schematic

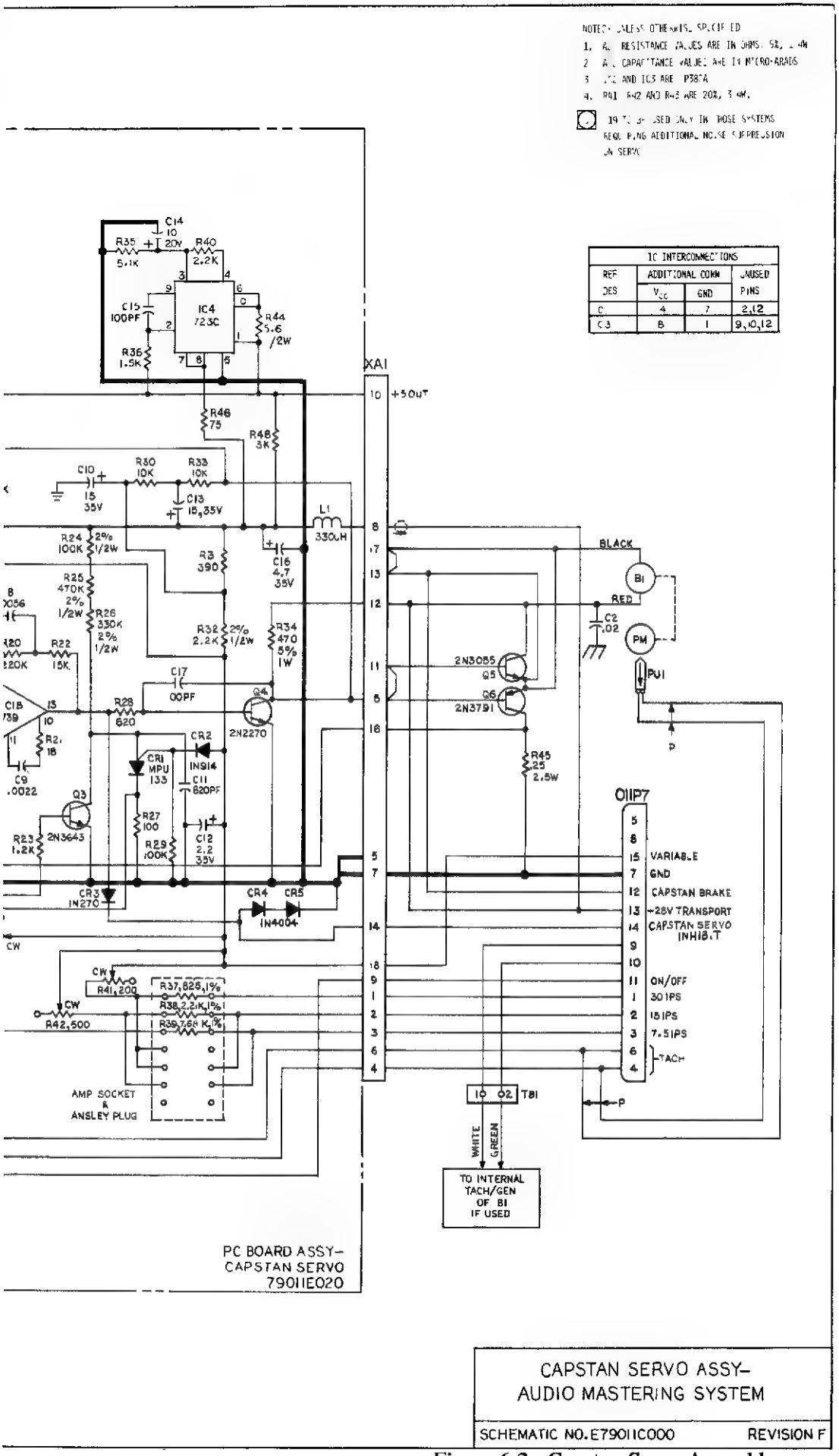

Figure 6-2. Capstan Servo Assembly

SECTION VI
SCHEMATICS

6-1. GENERAL

6-2. This section contains schematics and wiring diagrams for the 3M Brand Series 79 Recorder. The schematics and wiring diagrams are listed in table 6-1.

Table 6-1. List of Schematics

Figure No.	Title	Drawing No.
6-1	Composite Schematic	CE79000A700
6-2	Capstan Servo Assembly	E79011C000
6-3	Logic and Master Bias Supply	E79013D010
6-4	Motor Driver Assembly	E79013A030
6-5	Transport Function Diagram	CE79013A710
6-6	Function Switch Assembly	E79017A010
6-7	Master Control Assembly - Remote	E79017C030
6-8	Remote Cable	E79017B040
6-9	Electronics Remote Cable	E79017B045
6-10	Remote Mode Control Assembly, Transport Only	E79017A400
6-11	Remote Interconnections	CE79017A700
6-12	Signal Electronics	E79059F010
6-13	Reproduce Signal Electronics	E79059B020
6-14	Signal Electronics Composite	CE79059A700
6-15	Cabling Interconnections	Unnumbered
6-16	24 Track Head Set Assembly	E79119A100
6-17	Power Supply	79031A001-1 (P)
6-18	Power Supply	79031A001-2 (P)
6-19	Power Supply Module	A1-1
6-20	Power Supply Module	A2 and A3-1
6-21	Power Supply Module	A1-2
6-22	Power Supply Module	A3-2
6-23	Power Supply	79031A001-1 (C)
6-24	Power Supply	79031A001-2 (C)

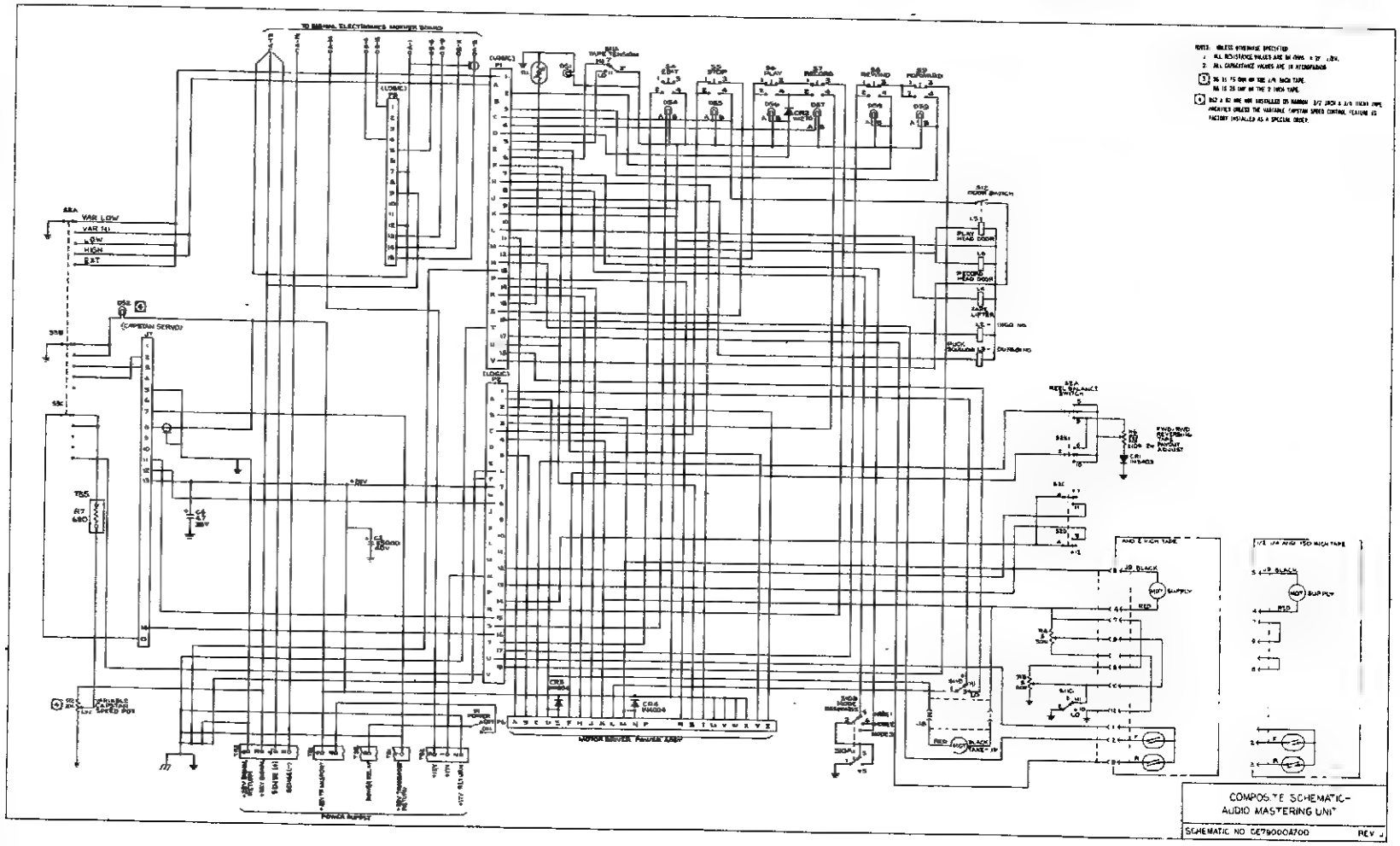

Figure 6-1. Composite Schematic

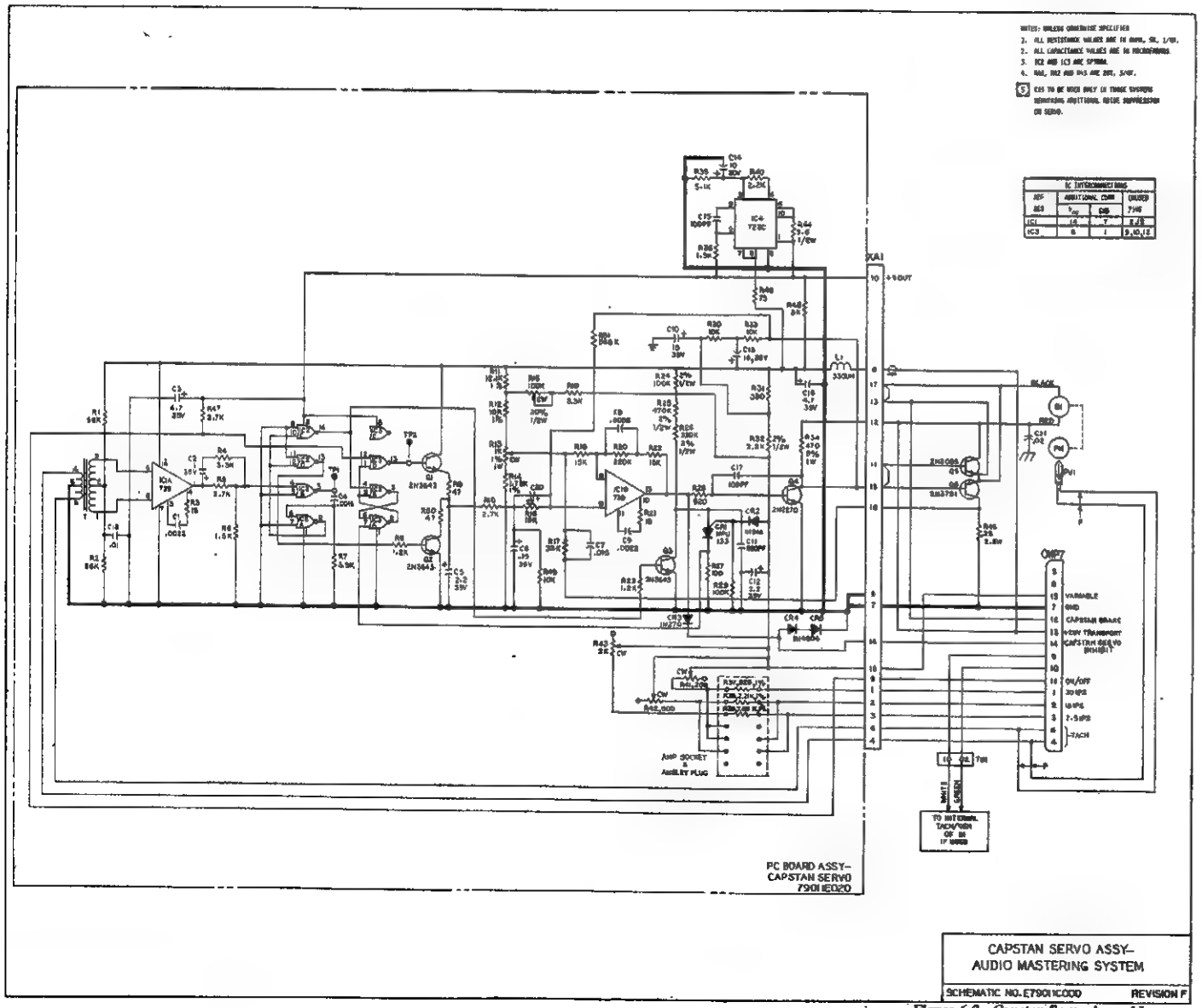

Figure 6-2. Capstan Servo Assembly

8-9/2-9

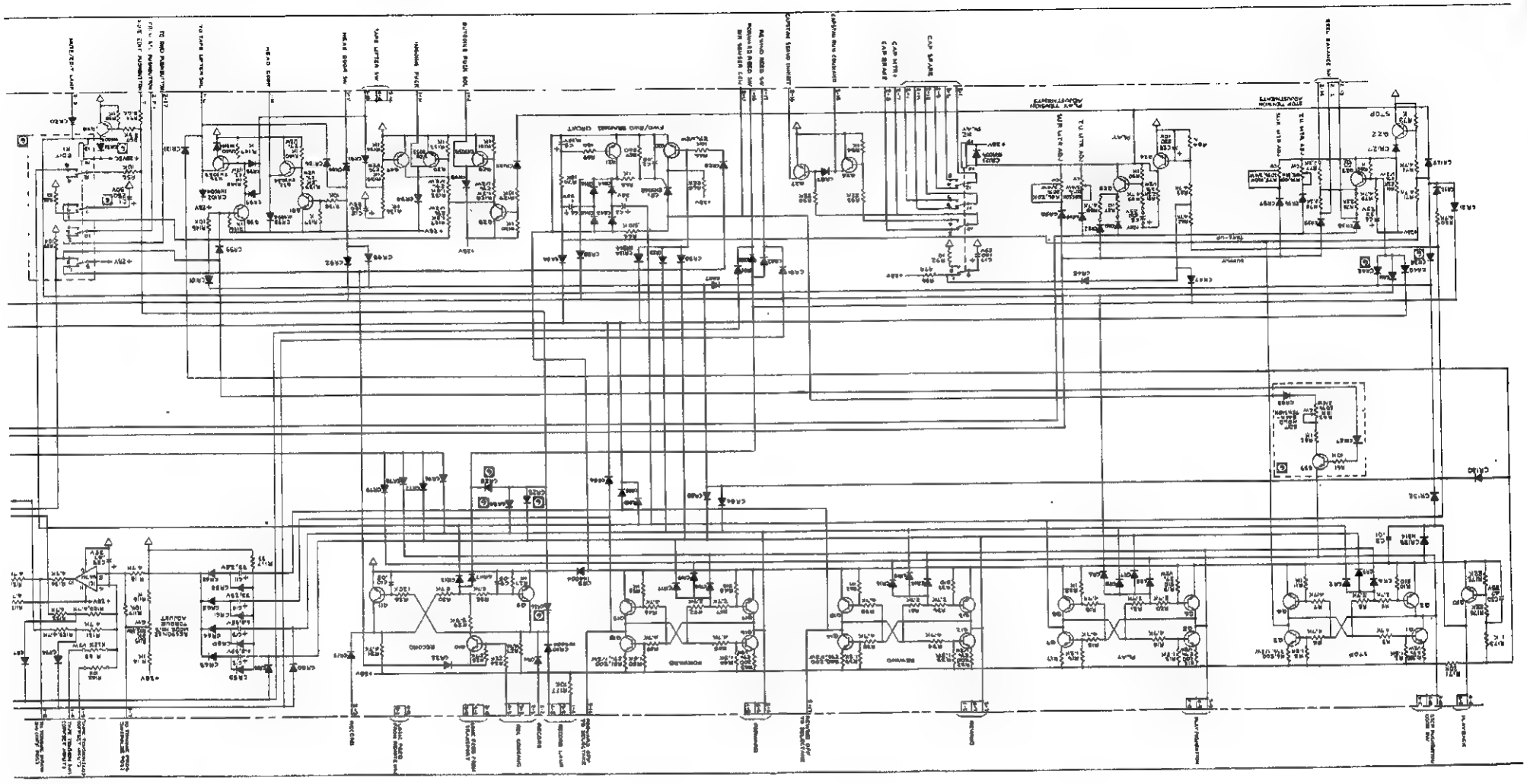

2 of 1

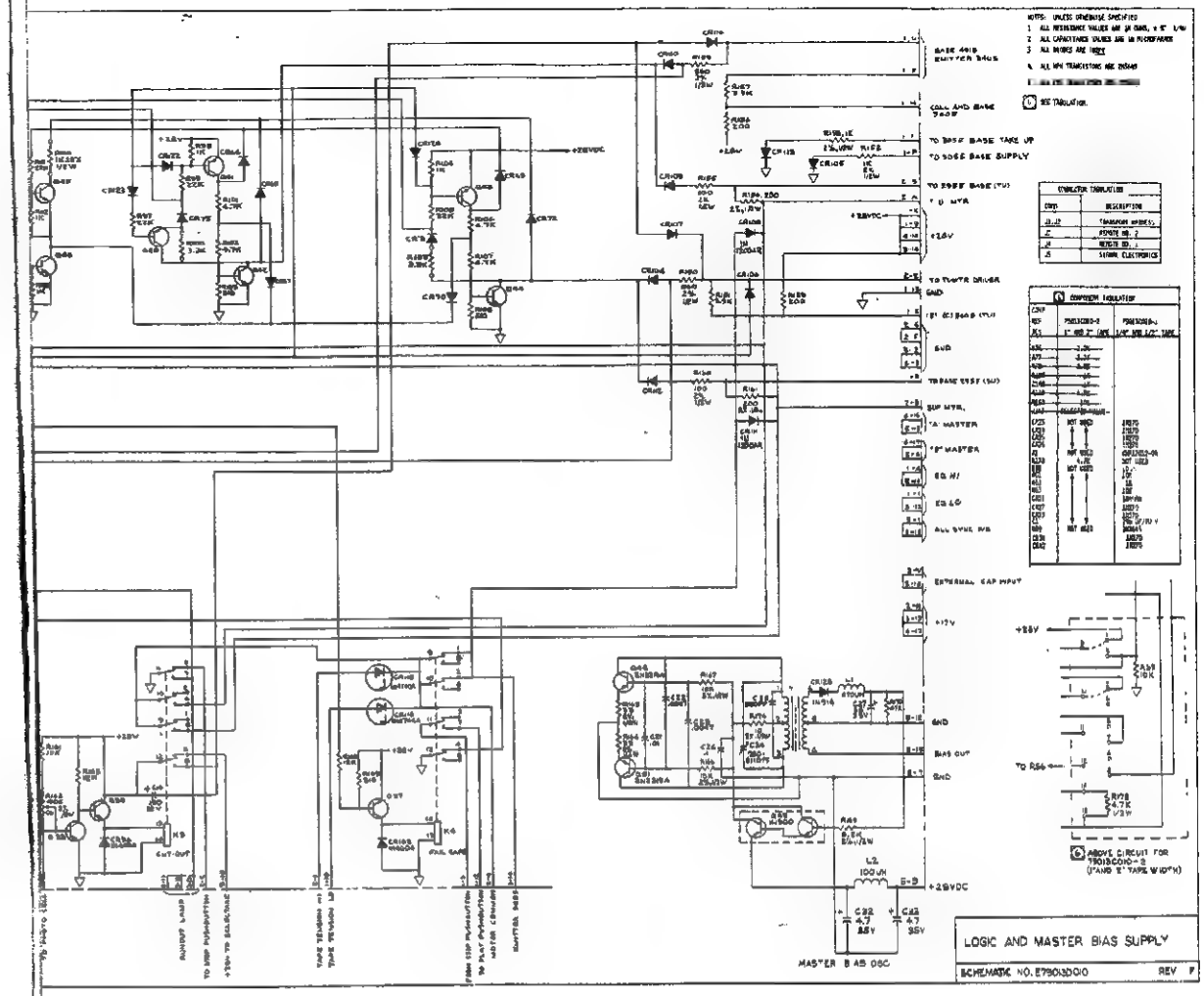

Figure 6-3. Logic and Master Bias Supply

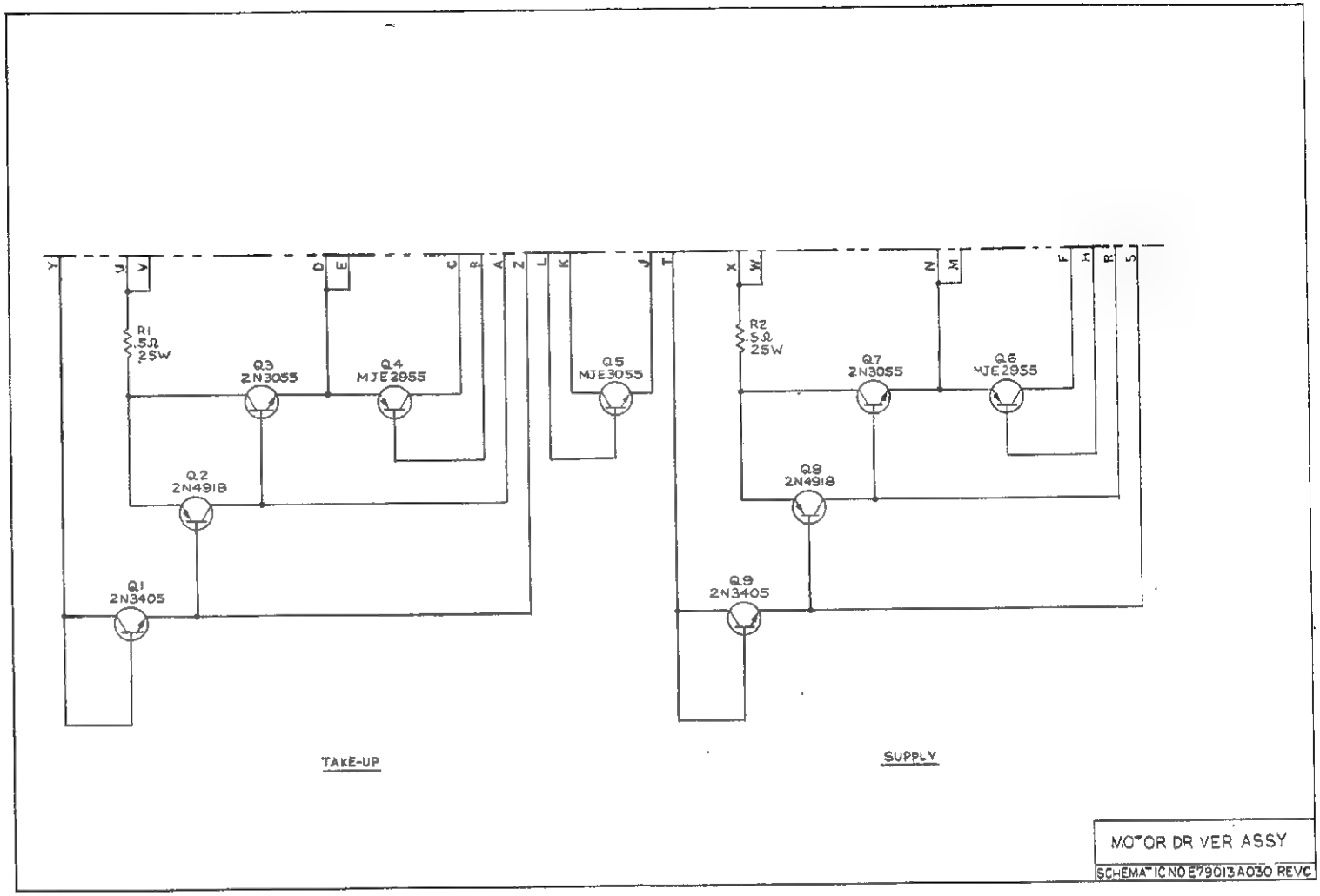

Figure 6-4. Motor Driver Assembly

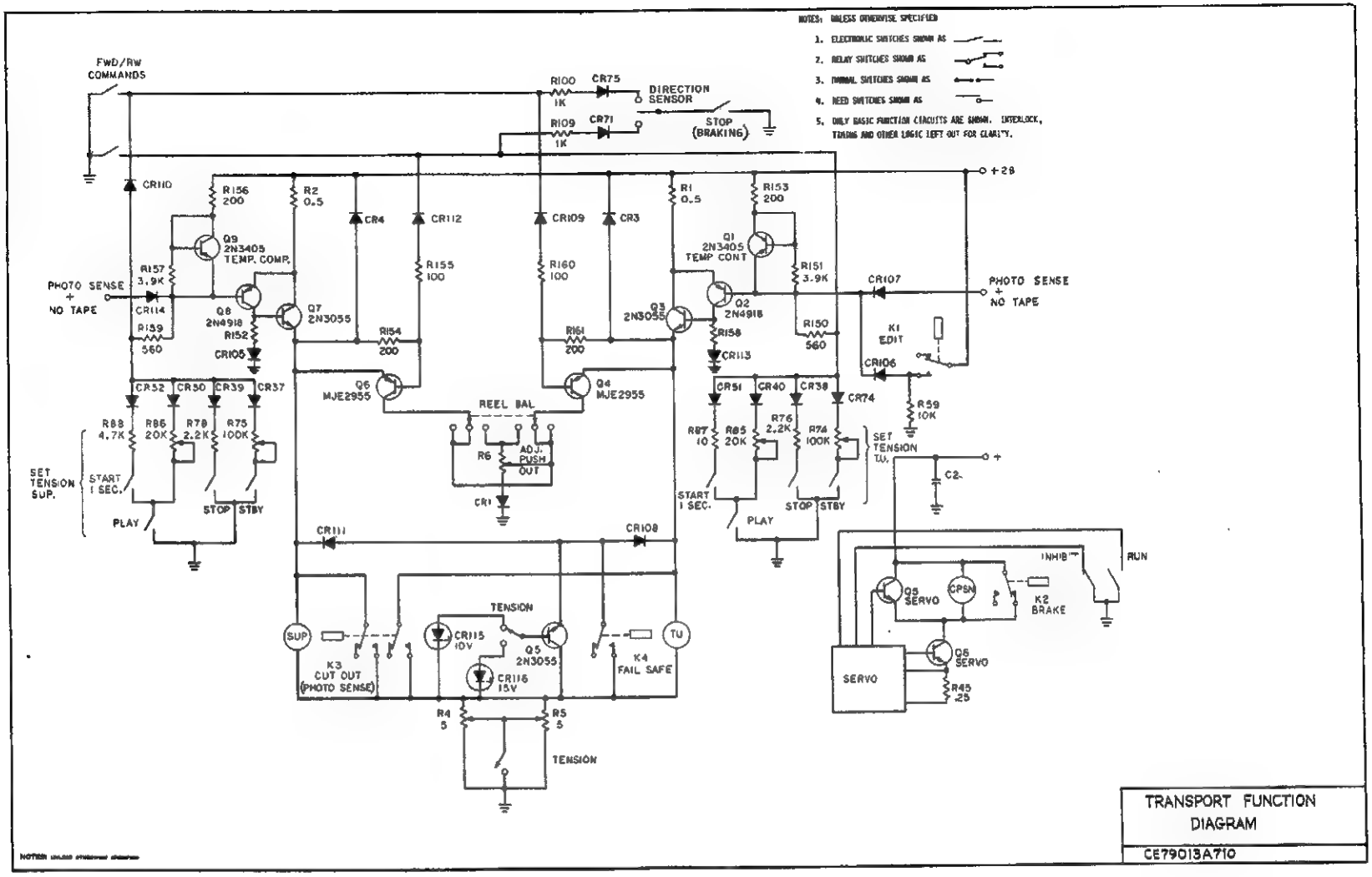

Figure 6-5. Transport Function Diagram

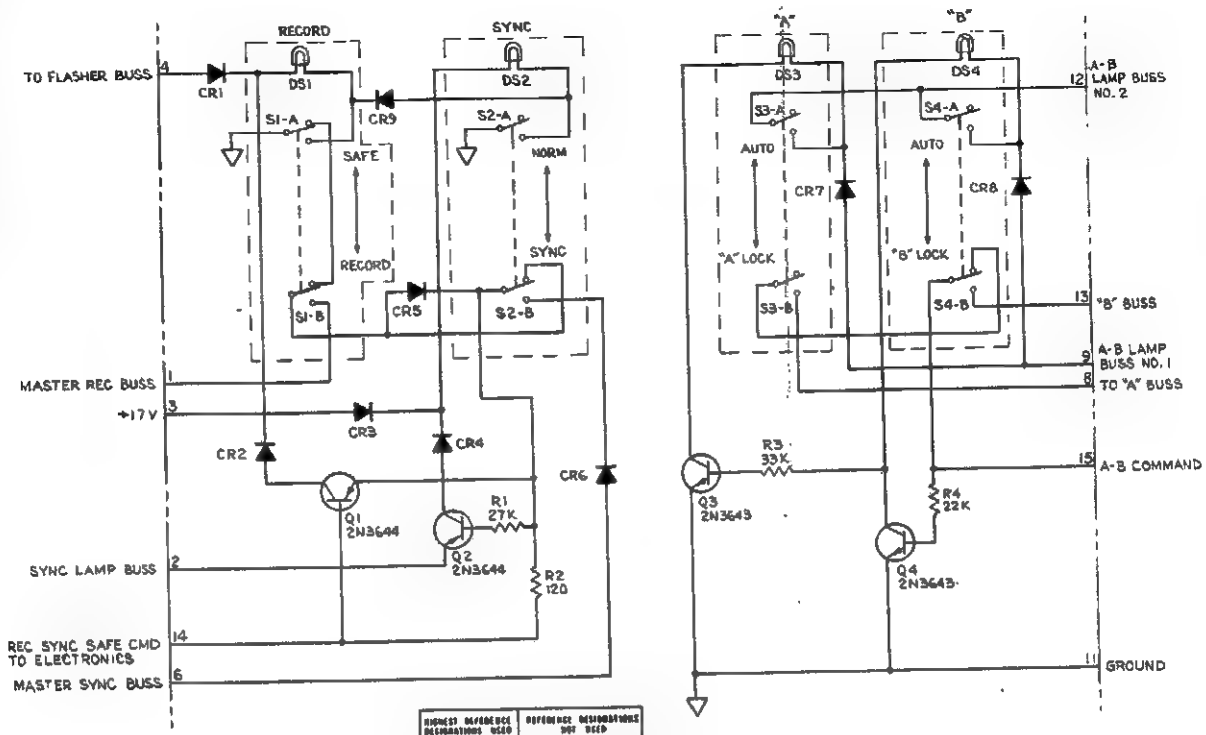

HIGHEST REFERENCE DESIGNATIONS USED		REFERENCE DESIGNATIONS NOT USED
C		
CR	9	
DS	4	
E		
I		
Q	4	
R	3	
S	4	

2. ALL DIODES ARE 1N270
1. ALL RESISTANCE VALUES ARE IN OHMS, ± 5%, 1/4 WATT

SIGNAL ELECTRONICS.
FUNCTION SWITCH ASSY.

E79017A010

Figure 6-6. Function Switch Assembly

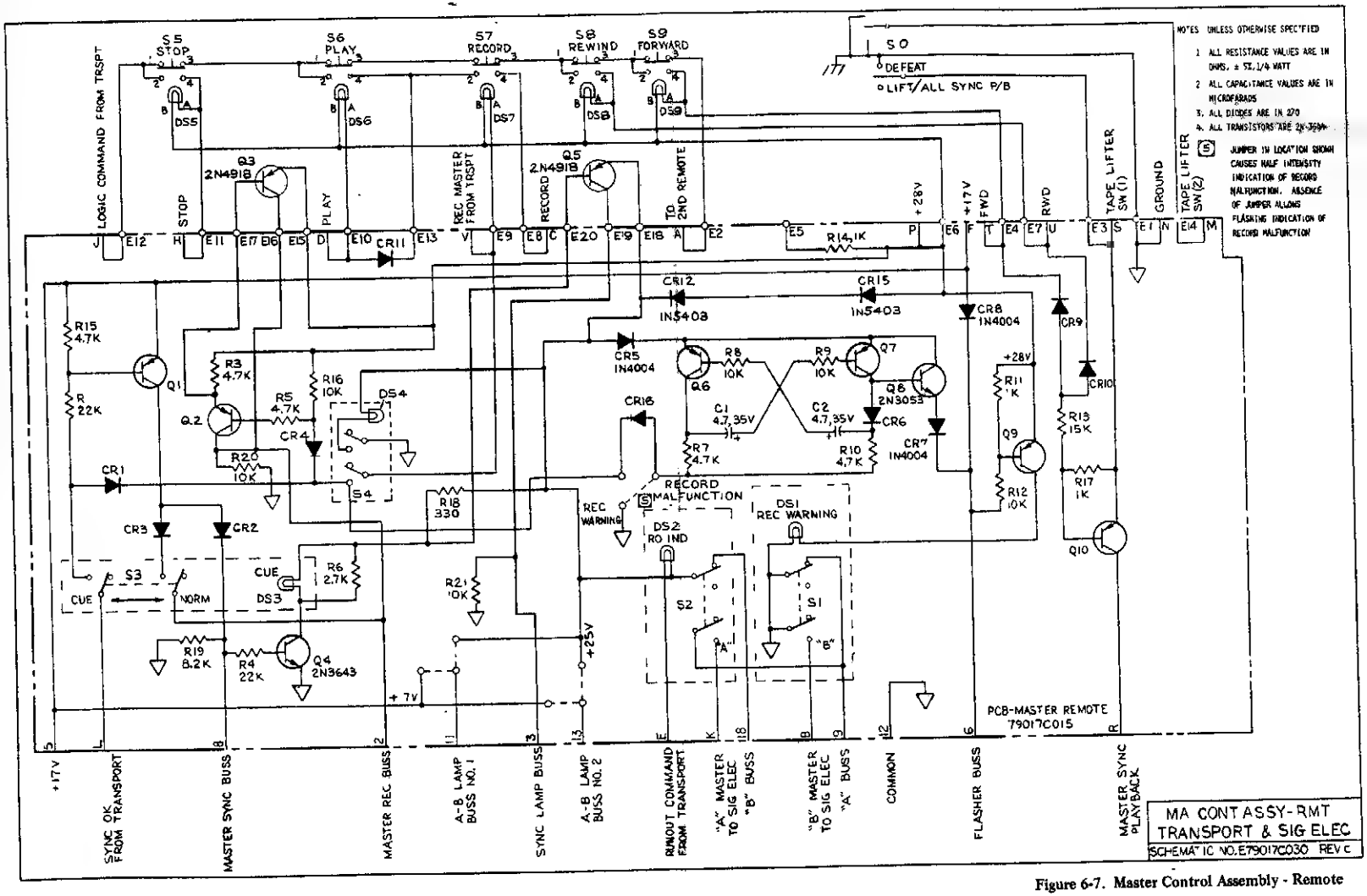

Figure 6-7. Master Control Assembly - Remote

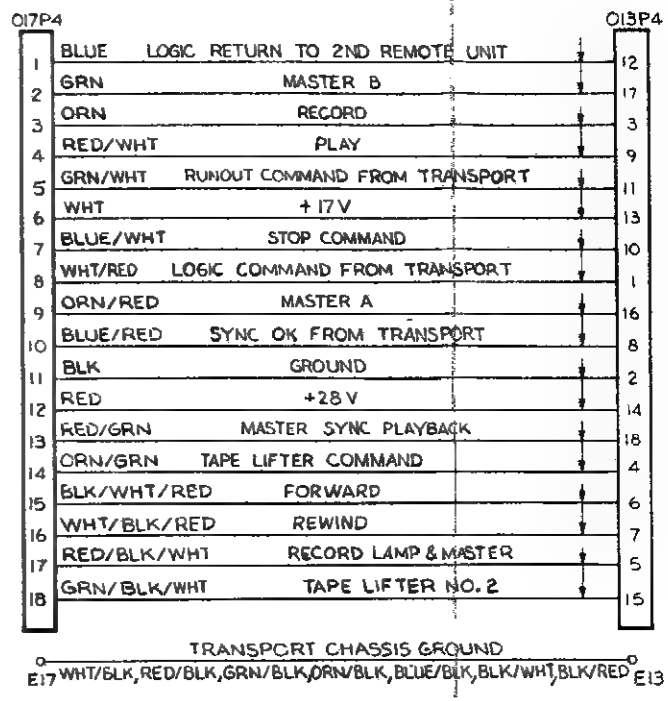

SCHEMATIC CABLE - REMOTE SIGNAL ELECTRONICS

E79017B045

Figure 6-8. Remote Cable

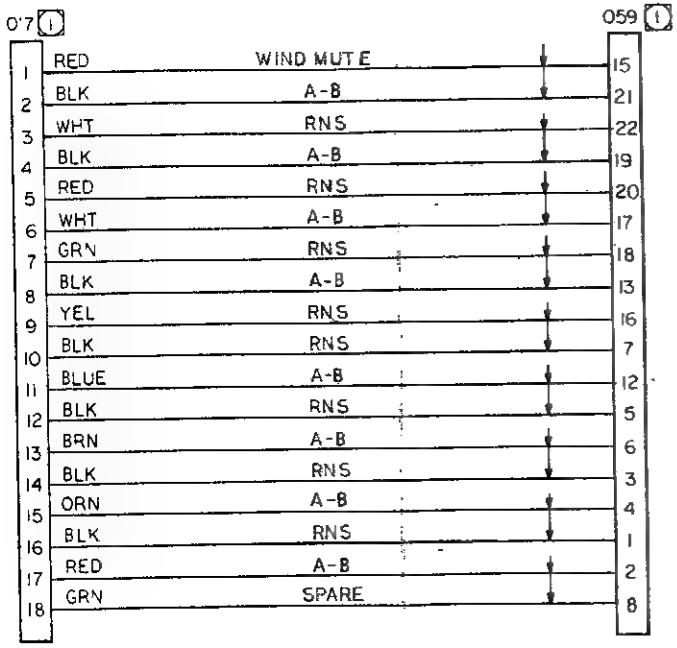

1 CONNECTOR REFERENCE DESIGNATOR SUFFIXES:
P8 FOR TRACKS 1 THRU 8
P16 FOR TRACKS 9 THRU 16
P24 FOR TRACKS 17 THRU 24
NOTES: UNLESS OTHERWISE SPECIFIED

REMOTE CABLE
ELECTRONICS SECTION
E790178045

Figure 6-9. Electronics Remote Cable

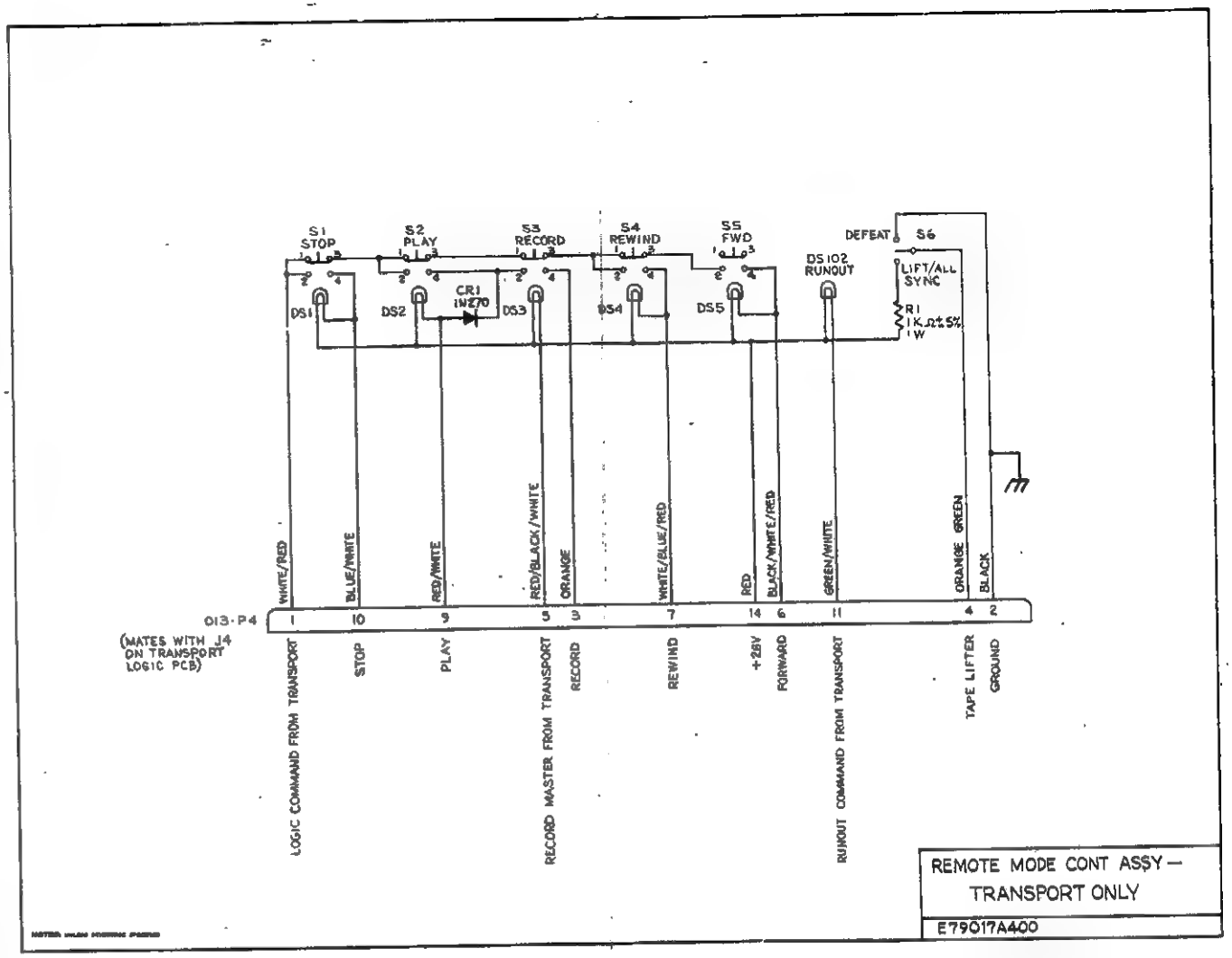

Figure 6-10. Remote Mode Control Assembly, Transport Only

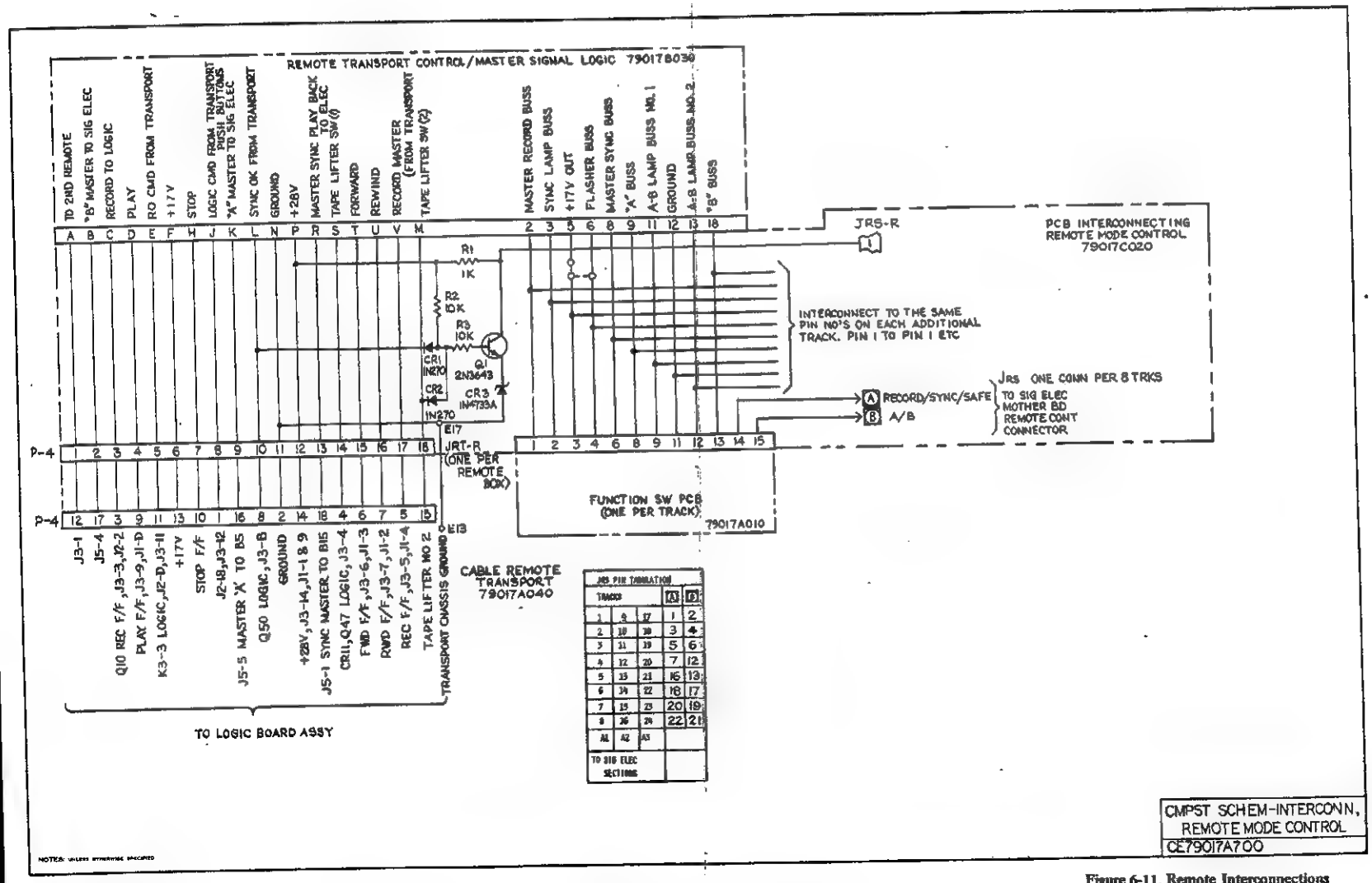

Figure 6-11. Remote Interconnections

1 of 2

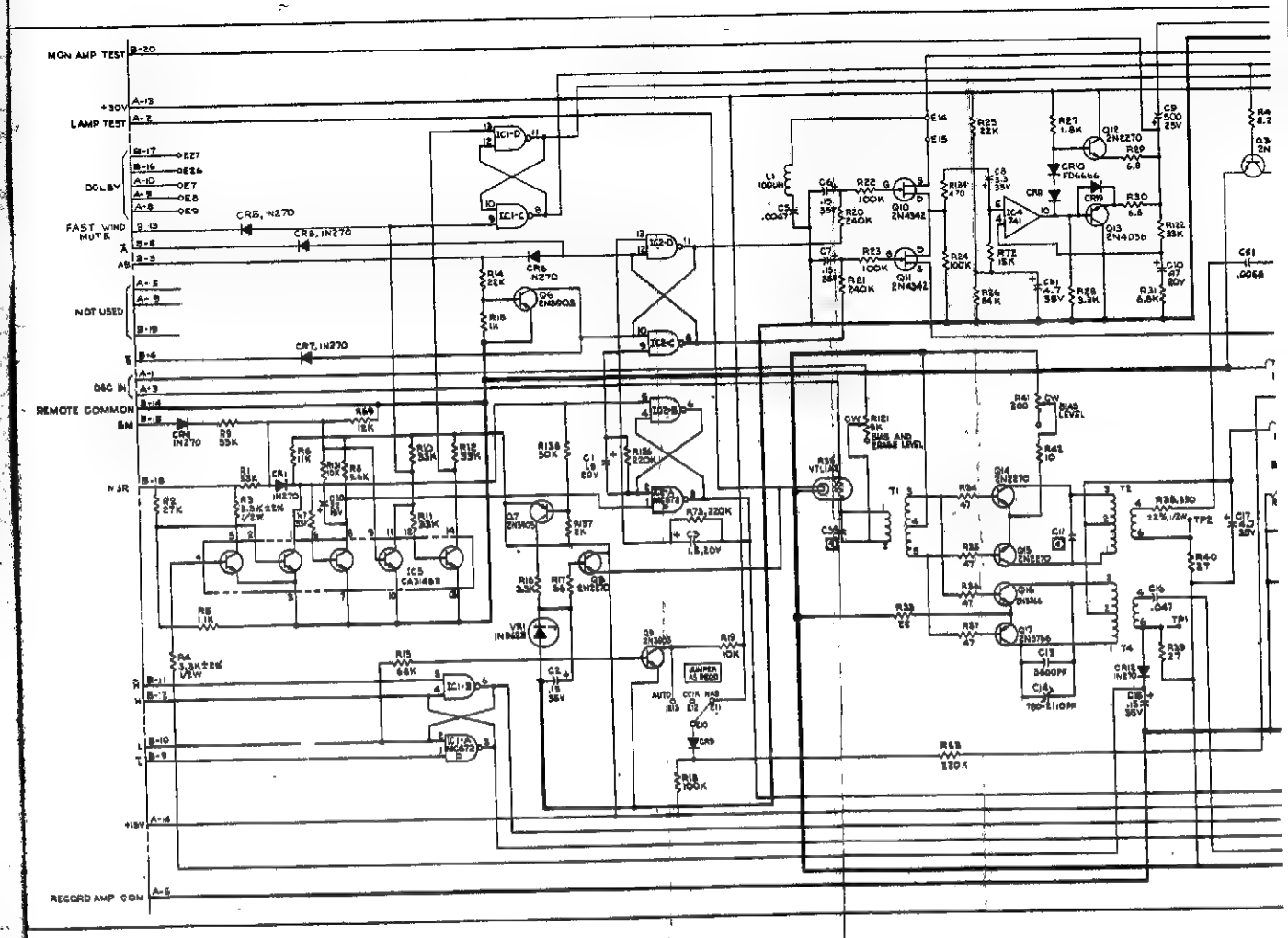
MON AMP TEST
+30V
LAMP TEST
DOLBY
FAST WIND MUTE
NOT USED
DBC IN
REMOTE COMMON
SM
NJR
RECORD AMP COM
+15V
CR5, 1N270
CR6, 1N270
CR7, 1N270
CR8, 1N270
CR9, 1N270
IC1-D
IC1-C
IC2-D
IC2-C
IC1-B
IC1-A
IC5 CA3146B
Q6 2N3905
Q7 2N3905
Q8 2N2270
Q9 2N3905
Q10 2N4342
Q11 2N4342
Q12 2N2270
Q13 2N4036
Q14 2N2270
Q15 2N2270
Q16 2N3446
Q17 2N3766
IC4 741
CR10 FD6666
CR11
CR12 1N270
CR13 1N270
VR1 1N962B
JUMPER AS REQUIRED
AUTO
CCIR
NAB
BIAS AND ERASE LEVEL
BIAS LEVEL
VTL1A
T1
T2
T4
TP1
TP2
C61 .0068

6-25/6-26

2 of 2

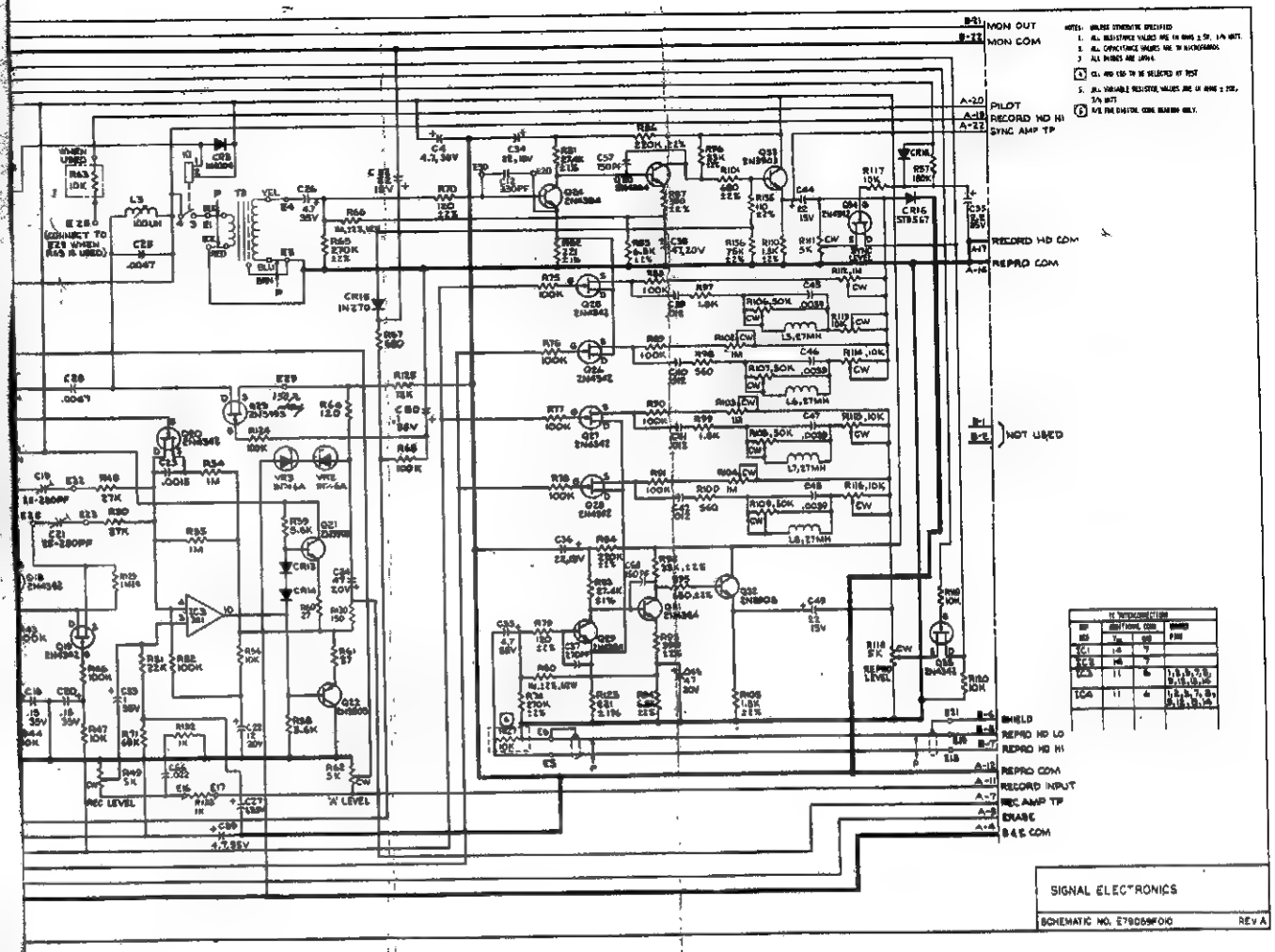

Figure 6-12. Signal Electronics

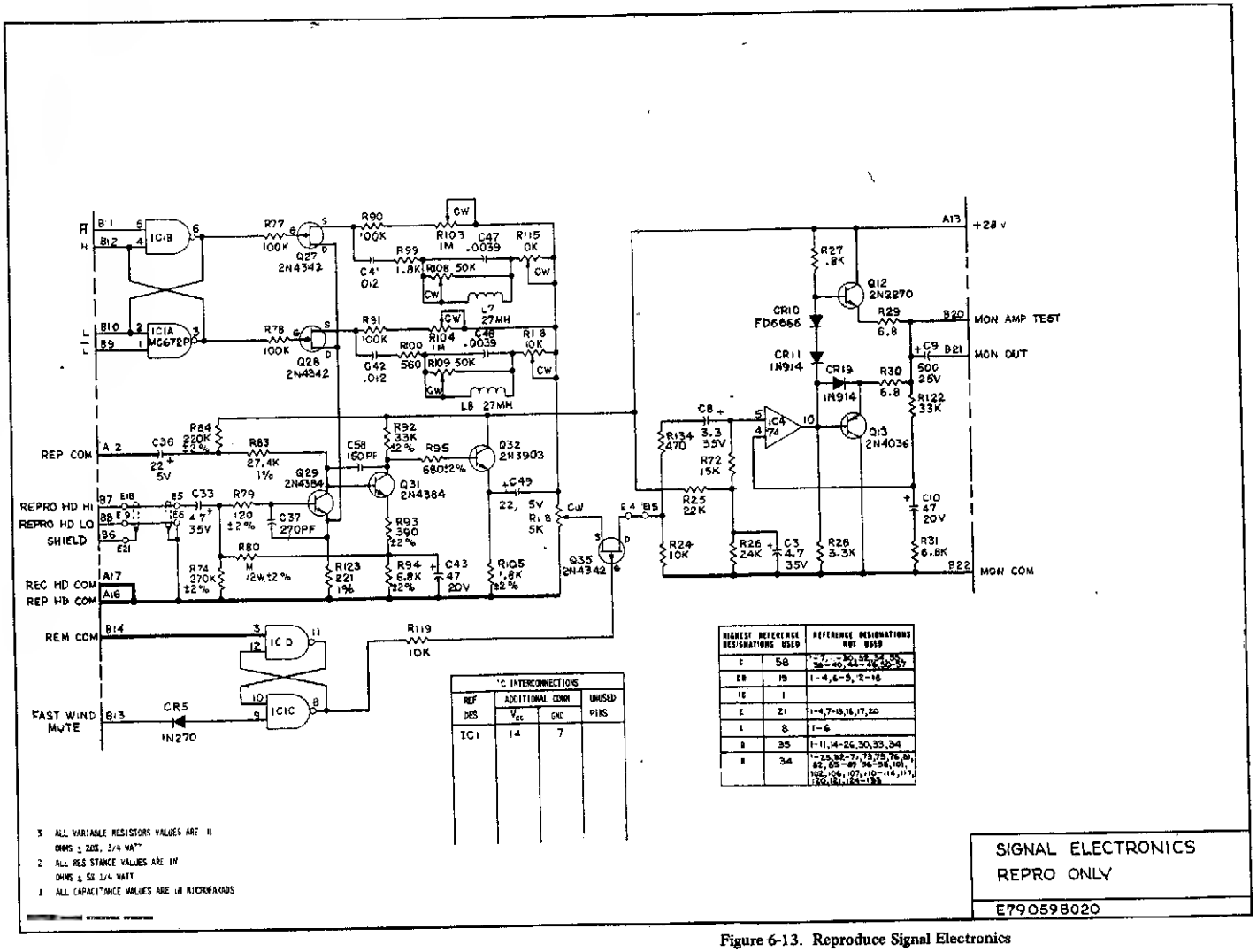

'C INTERCONNECTIONS			
REF DES	ADDITIONAL CONN V_{cc}	GND	UNUSED PINS
IC1	14	7	

HIGHEST REFERENCE DESIGNATIONS USED		REFERENCE DESIGNATIONS NOT USED
C	58	1-7, -30, 32, 34, 35, 38-40, 44-46, 50-57
CR	19	1-4, 6-5, 2-16
IC	1	
E	21	1-4, 7-18, 16, 17, 20
L	8	1-6
Q	35	1-11, 14-26, 30, 33, 34
R	34	1-23, 32-7, 73, 75, 76, 81, 82, 85-89, 96-98, 101, 102, 106, 107, 110-114, 117, 120, 121, 124-133

3 ALL VARIABLE RESISTORS VALUES ARE IN OHMS ± 20%, 3/4 WATT
2 ALL RESISTANCE VALUES ARE IN OHMS ± 5% 1/4 WATT
1 ALL CAPACITANCE VALUES ARE IN MICROFARADS

Figure 6-13. Reproduce Signal Electronics

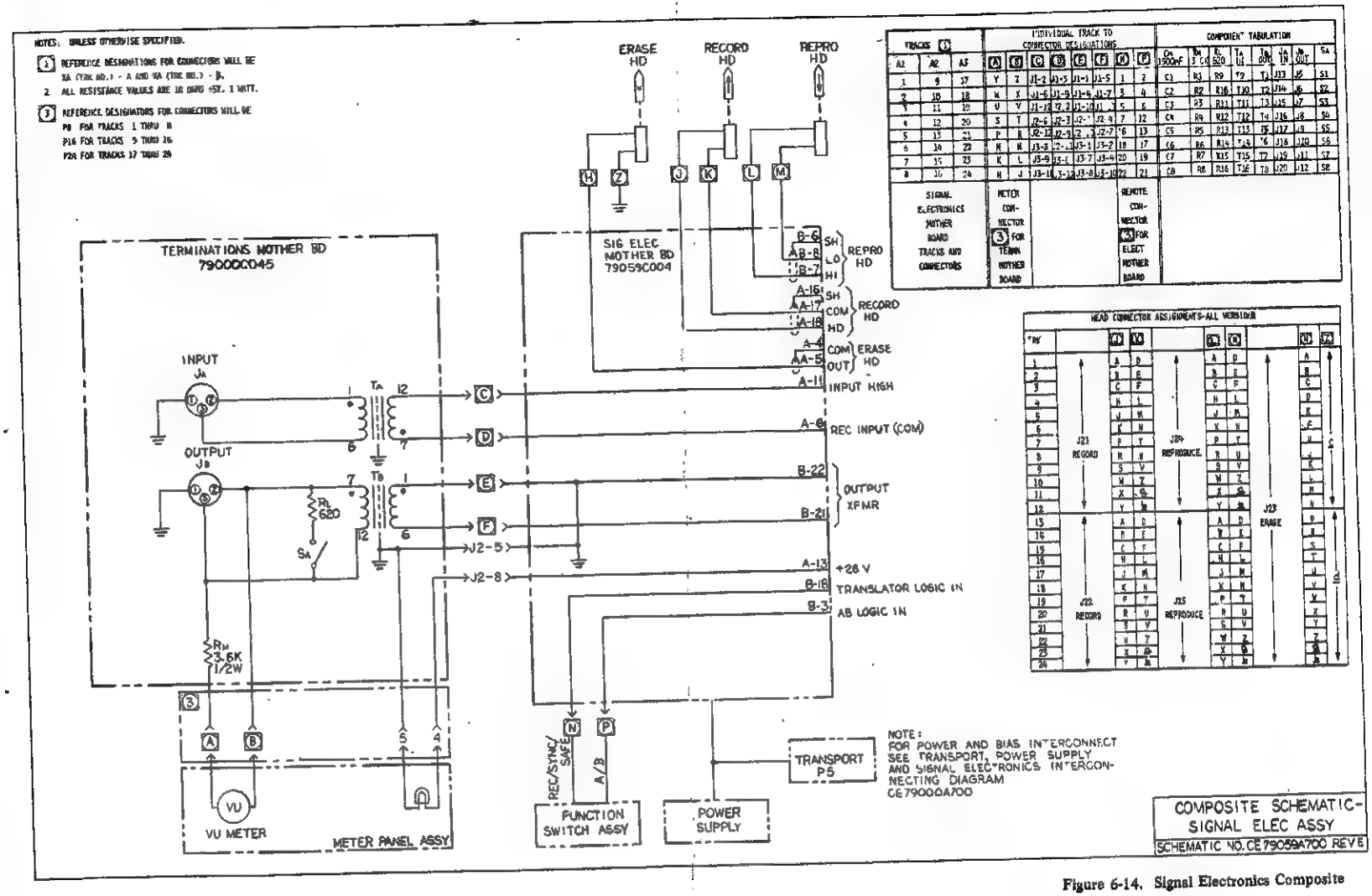

Figure 6-14. Signal Electronics Composite

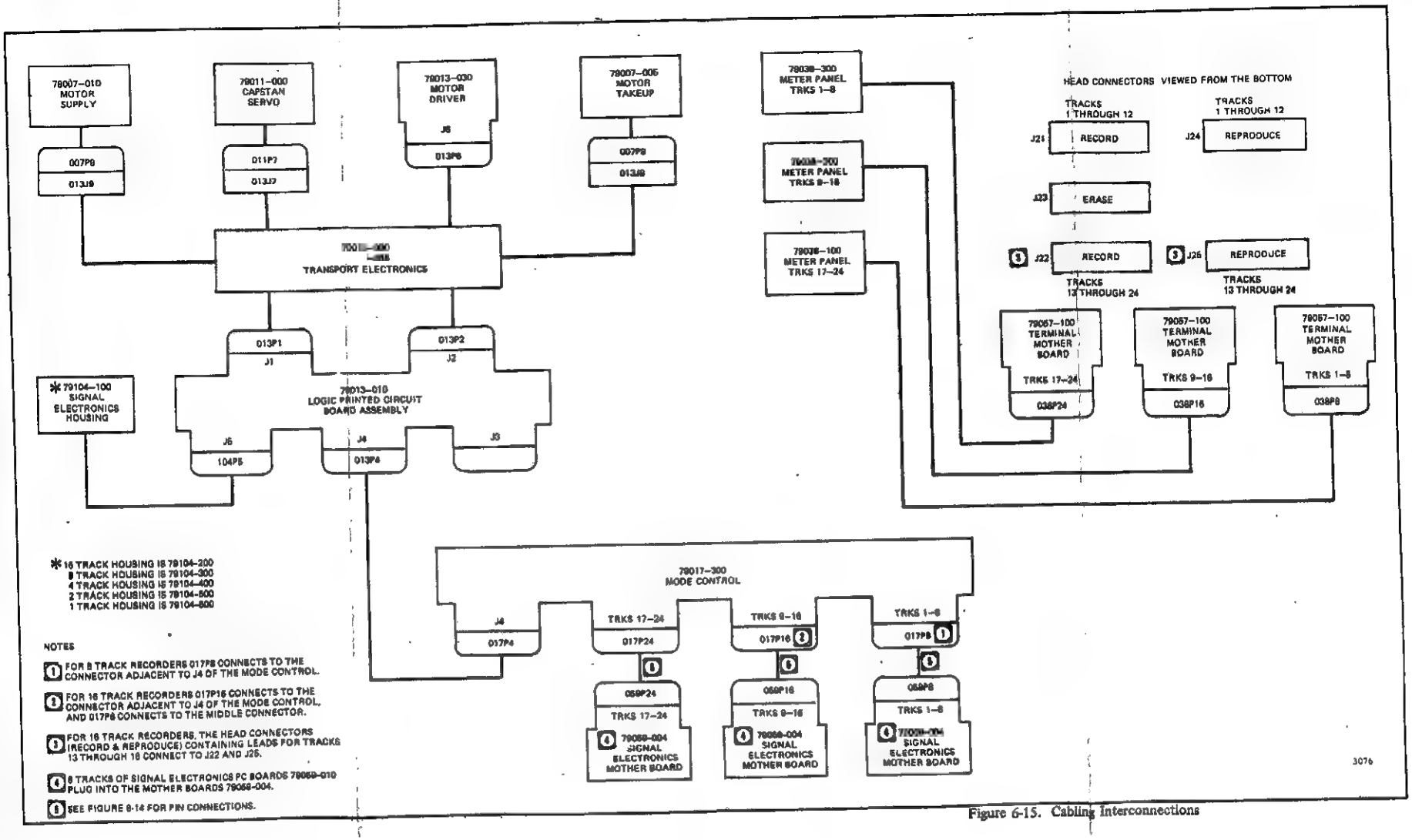

* 16 TRACK HOUSING IS 79104-200
8 TRACK HOUSING IS 79104-300
4 TRACK HOUSING IS 79104-400
2 TRACK HOUSING IS 79104-500
1 TRACK HOUSING IS 79104-600

NOTES

1. FOR 8 TRACK RECORDERS 017P8 CONNECTS TO THE CONNECTOR ADJACENT TO J4 OF THE MODE CONTROL.
2. FOR 16 TRACK RECORDERS 017P16 CONNECTS TO THE CONNECTOR ADJACENT TO J4 OF THE MODE CONTROL, AND 017P8 CONNECTS TO THE MIDDLE CONNECTOR.
3. FOR 16 TRACK RECORDERS, THE HEAD CONNECTORS (RECORD & REPRODUCE) CONTAINING LEADS FOR TRACKS 13 THROUGH 16 CONNECT TO J22 AND J26.
4. 8 TRACKS OF SIGNAL ELECTRONICS PC BOARDS 79059-010 PLUG INTO THE MOTHER BOARDS 79059-004.
5. SEE FIGURE 6-14 FOR PIN CONNECTIONS.

Figure 6-15. Cabling Interconnections

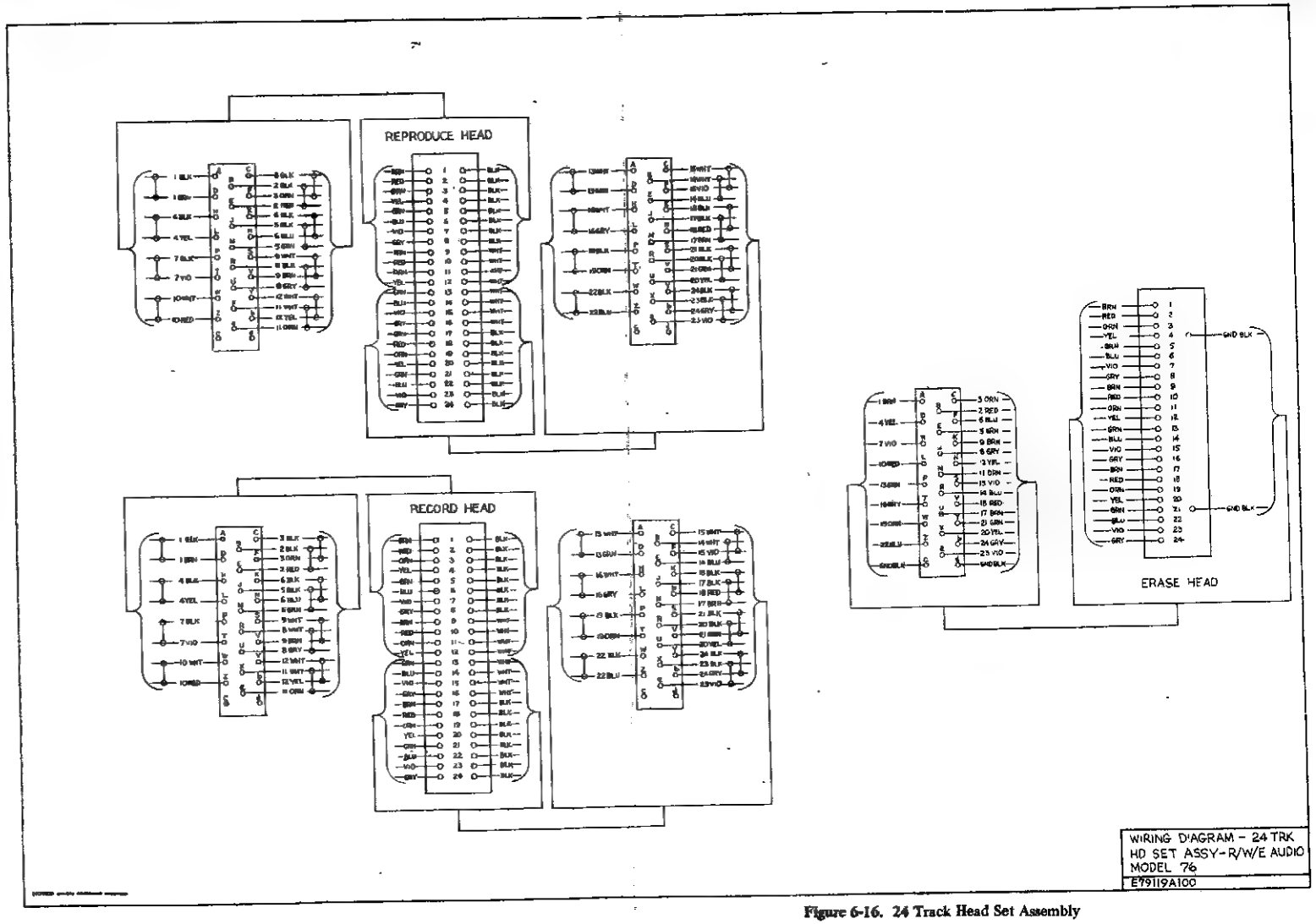

Figure 6-16. 24 Track Head Set Assembly

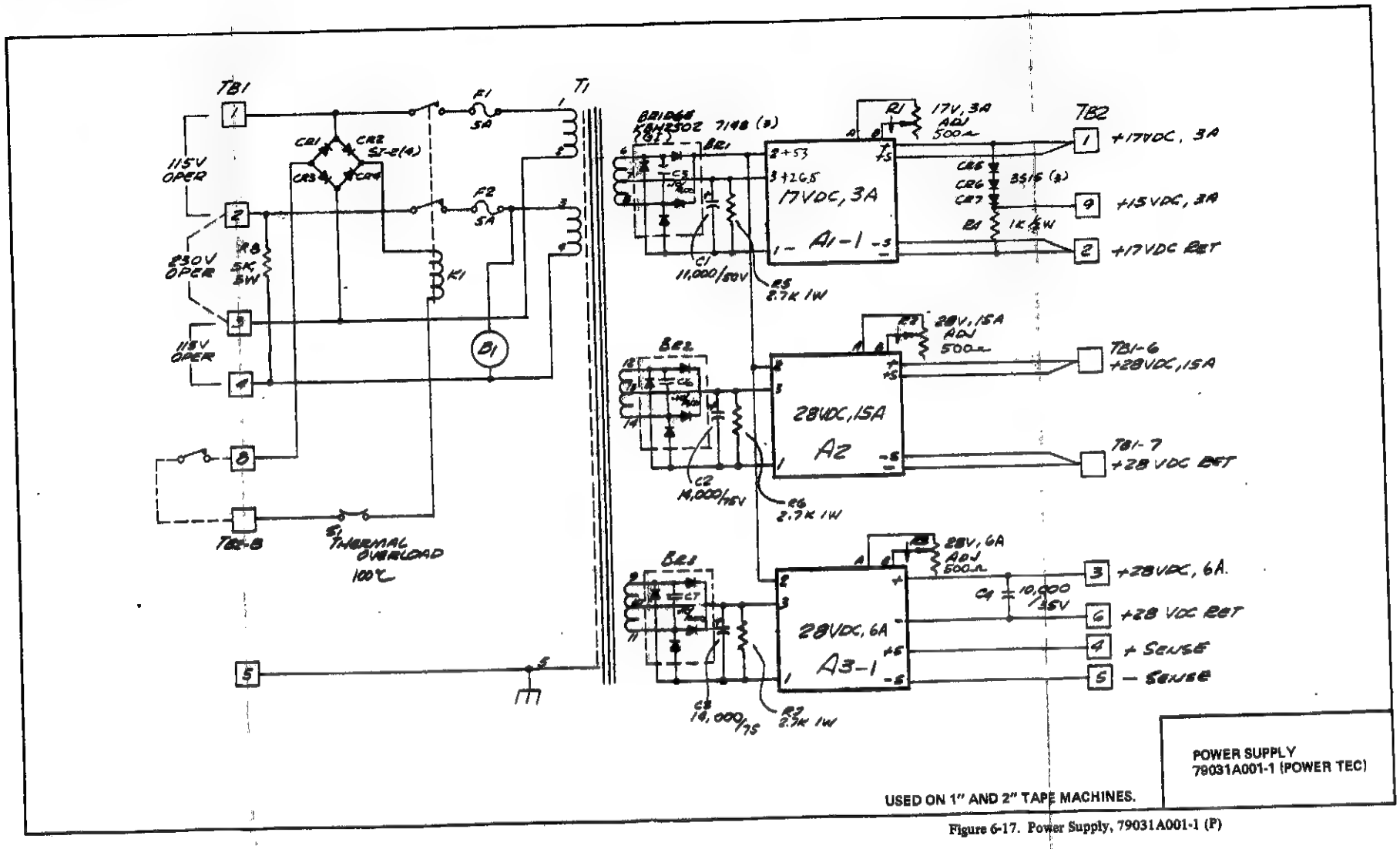

Figure 6-17. Power Supply, 79031A001-1 (F)

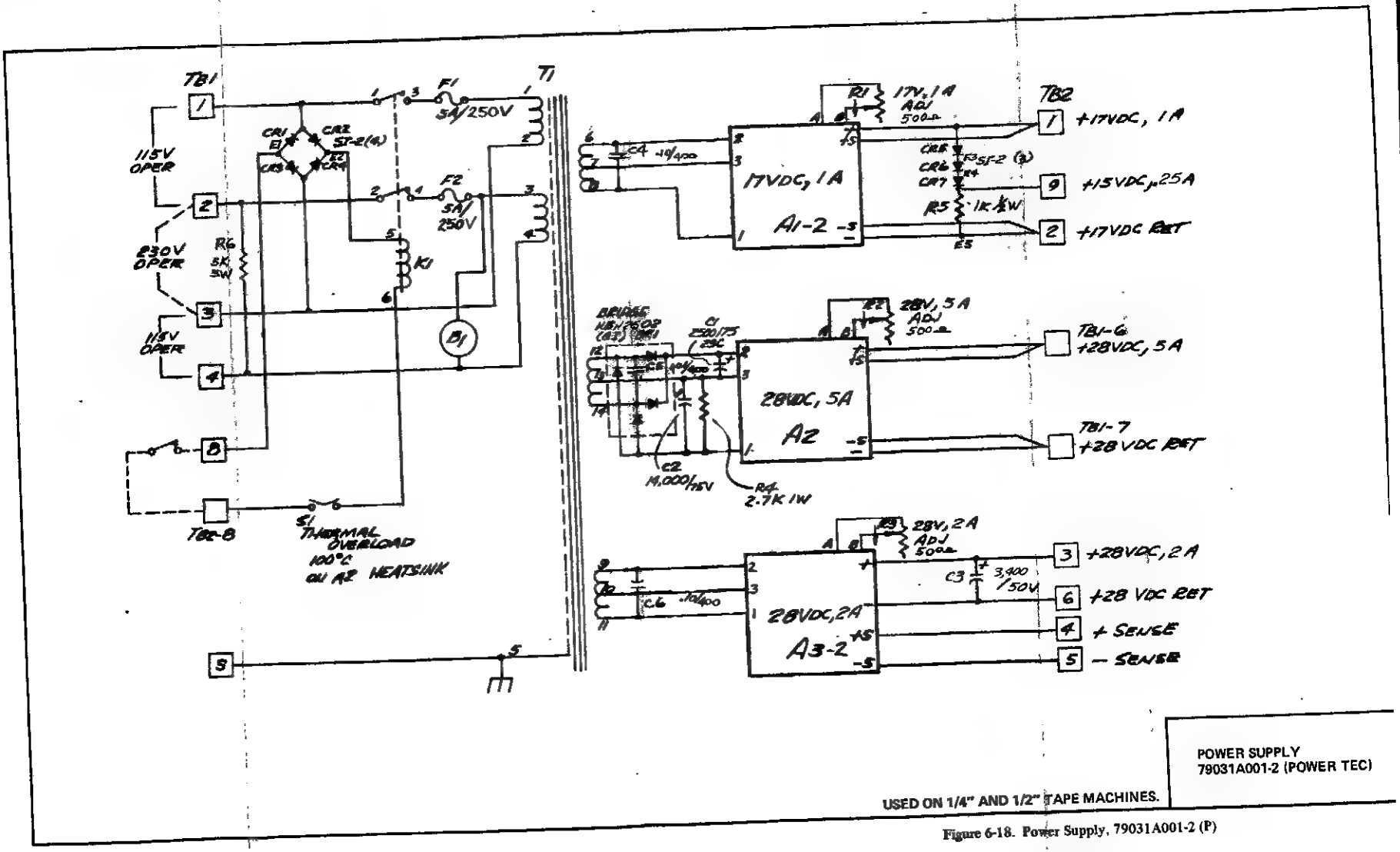

Figure 6-18. Power Supply, 79031A001-2 (P)

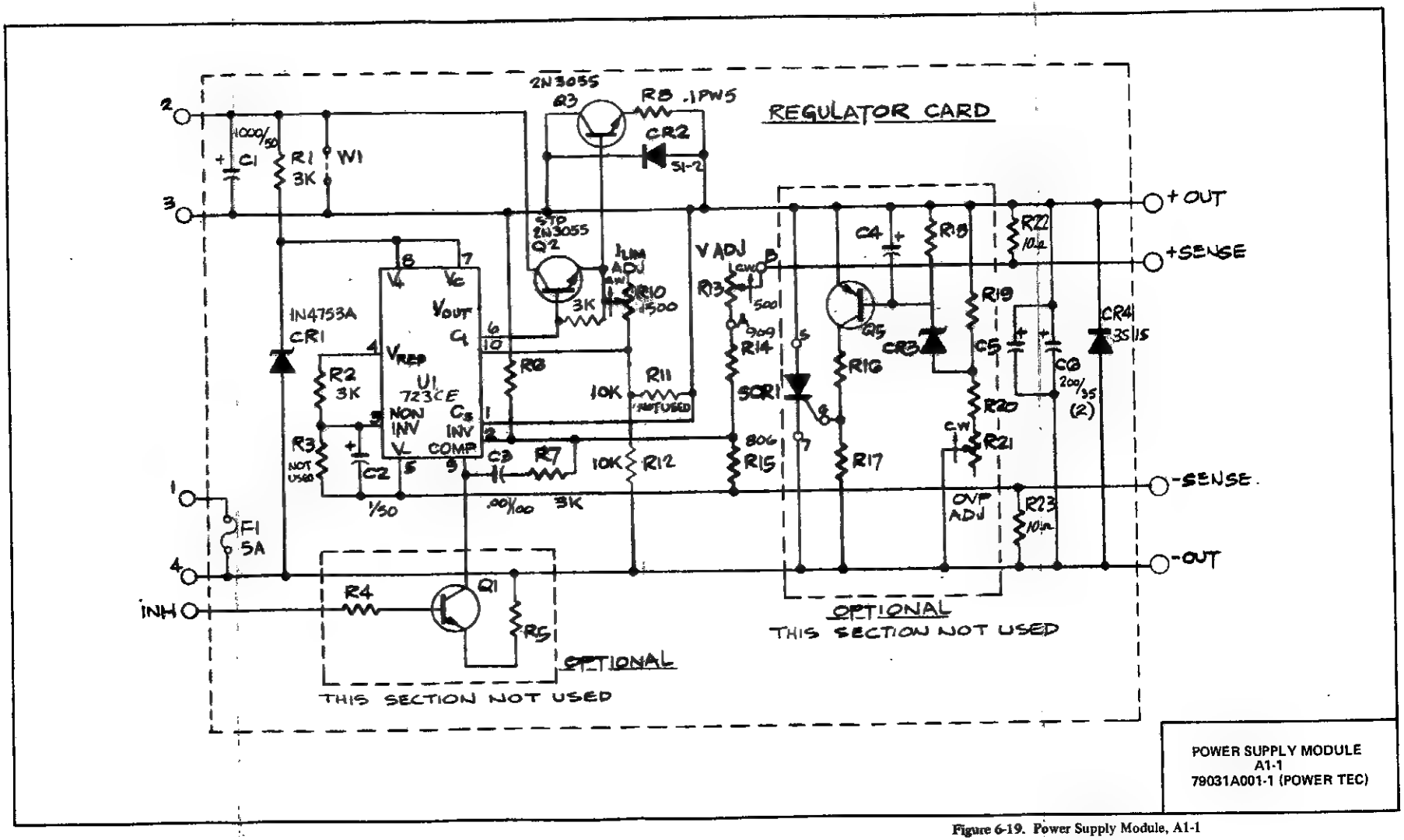

POWER SUPPLY MODULE
A1-1
79031A001-1 (POWER TEC)

Figure 6-19. Power Supply Module, A1-1

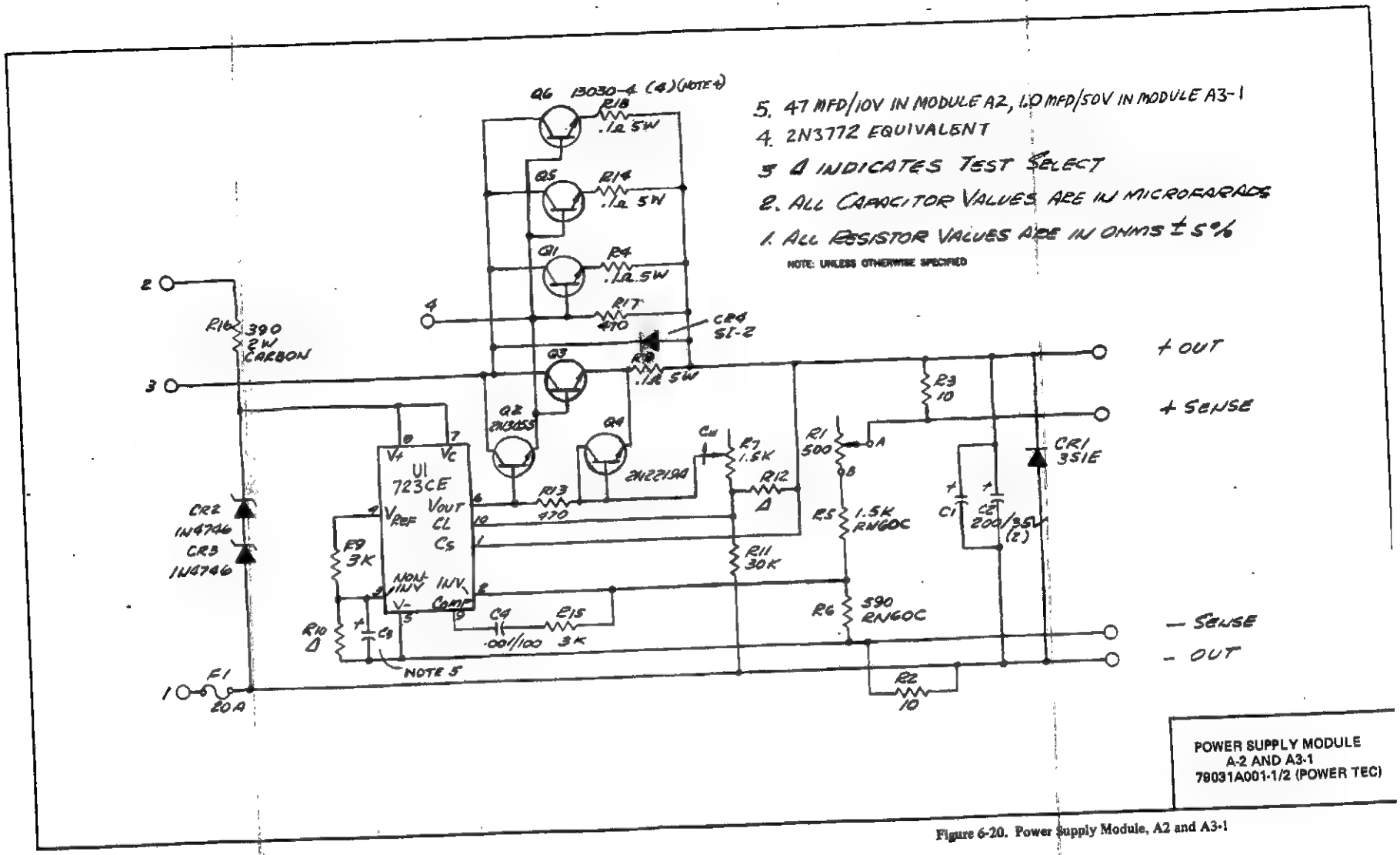

POWER SUPPLY MODULE
A-2 AND A3-1
79031A001-1/2 (POWER TEC)

Figure 6-20. Power Supply Module, A2 and A3-1

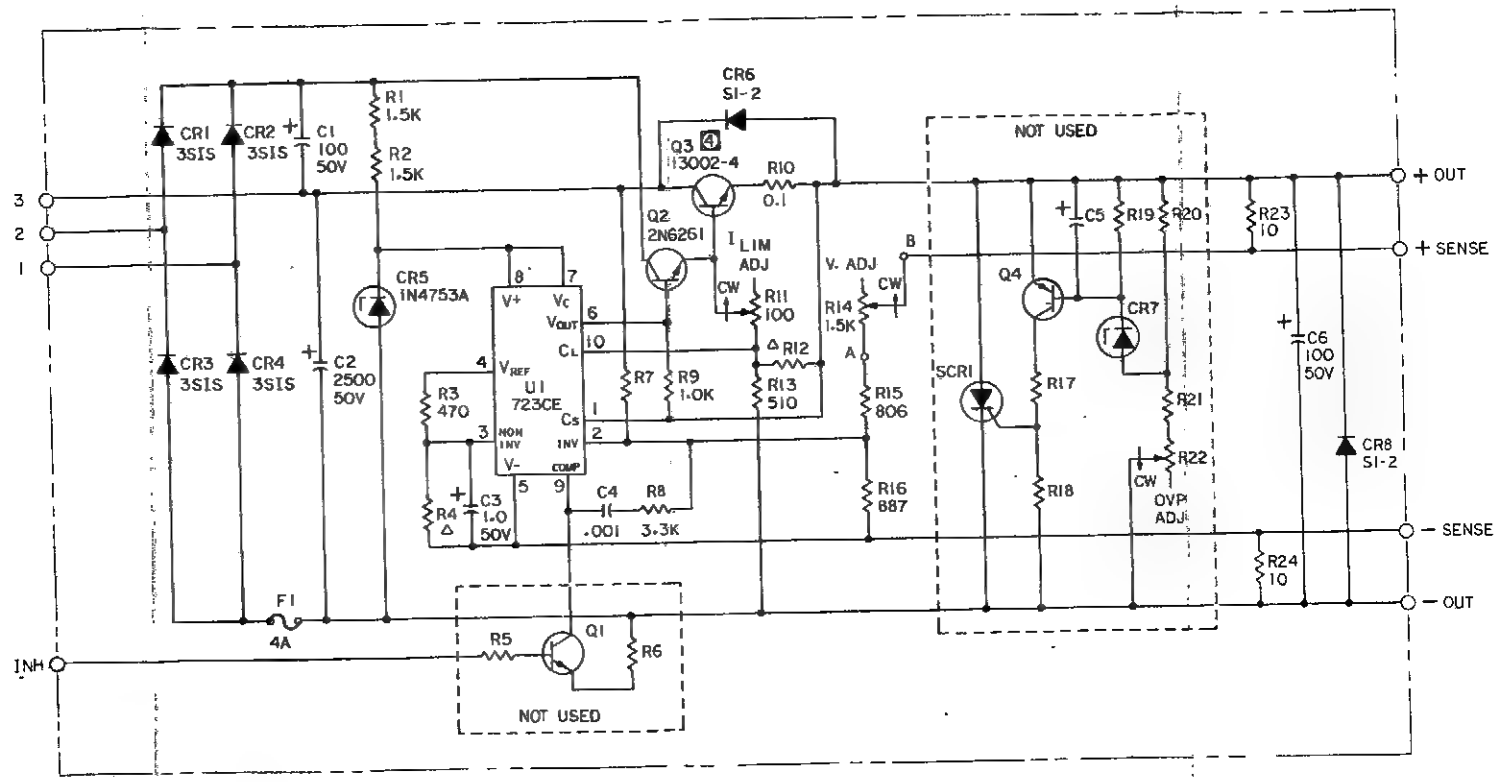

[4] 2N3055 OR EQUIVALENT

3. △ INDICATES TEST SELECT
2. ALL CAPACITOR VALUES ARE IN MICROFARADS
1. ALL RESISTOR VALUES ARE IN OHMS, ± 5%

NOTES: UNLESS OTHERWISE SPECIFIED

POWER SUPPLY MODULE
A1-2
79031A001-2 (POWER TEC)

Figure 6-21. Power Supply Module, A1-2

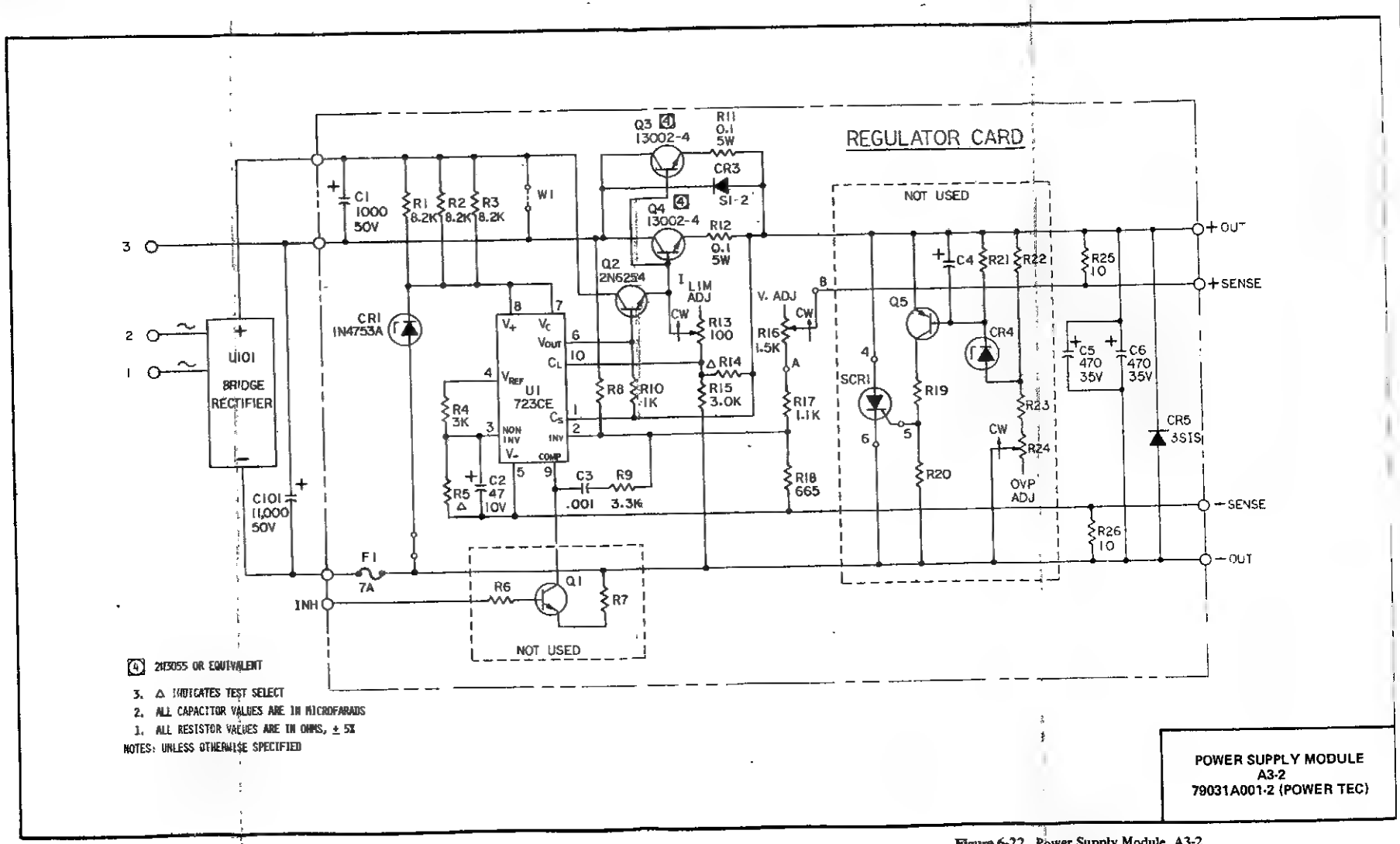

Figure 6-22. Power Supply Module, A3-2

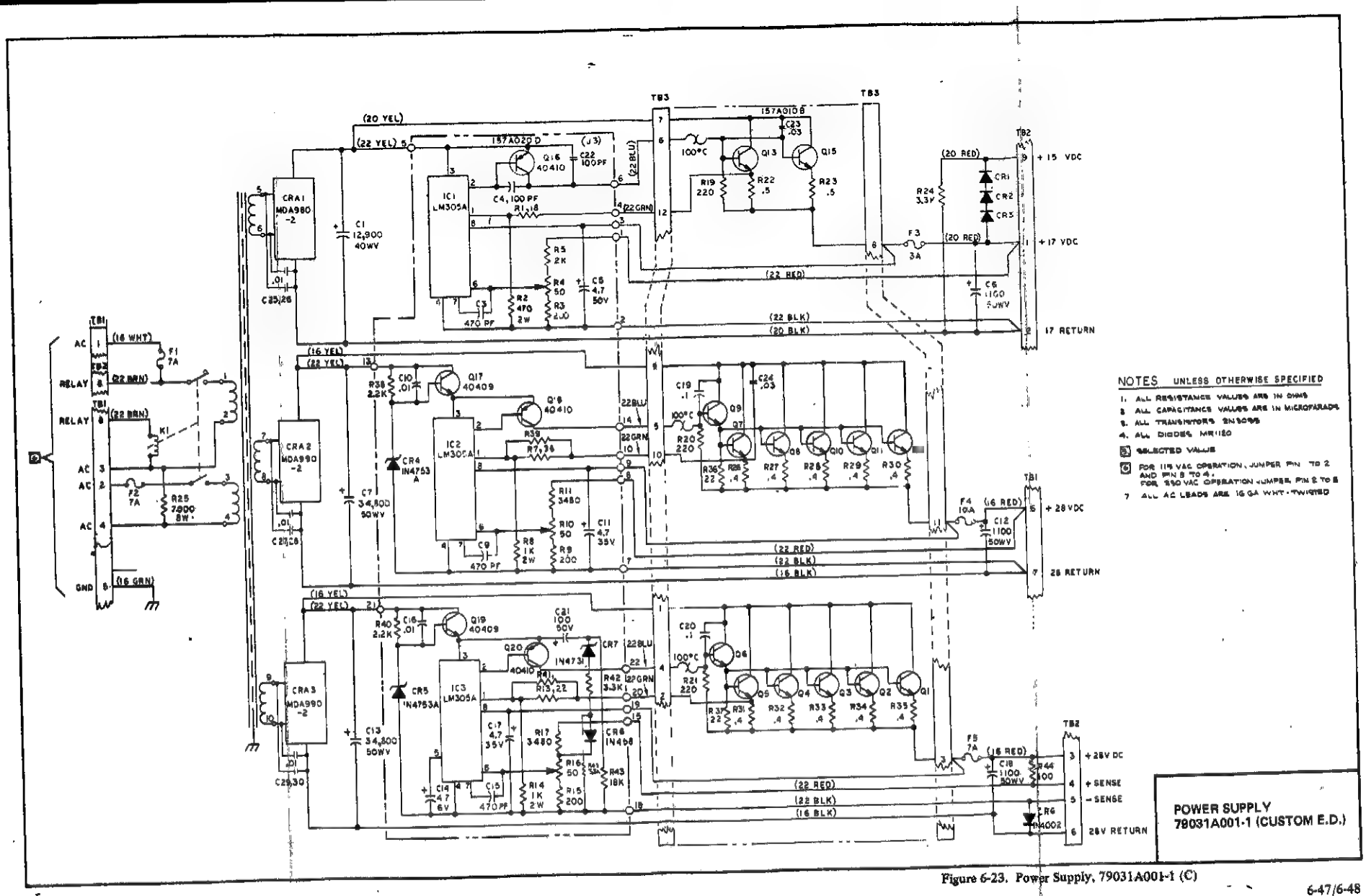

Figure 6-23. Power Supply, 79031A001-1 (C)

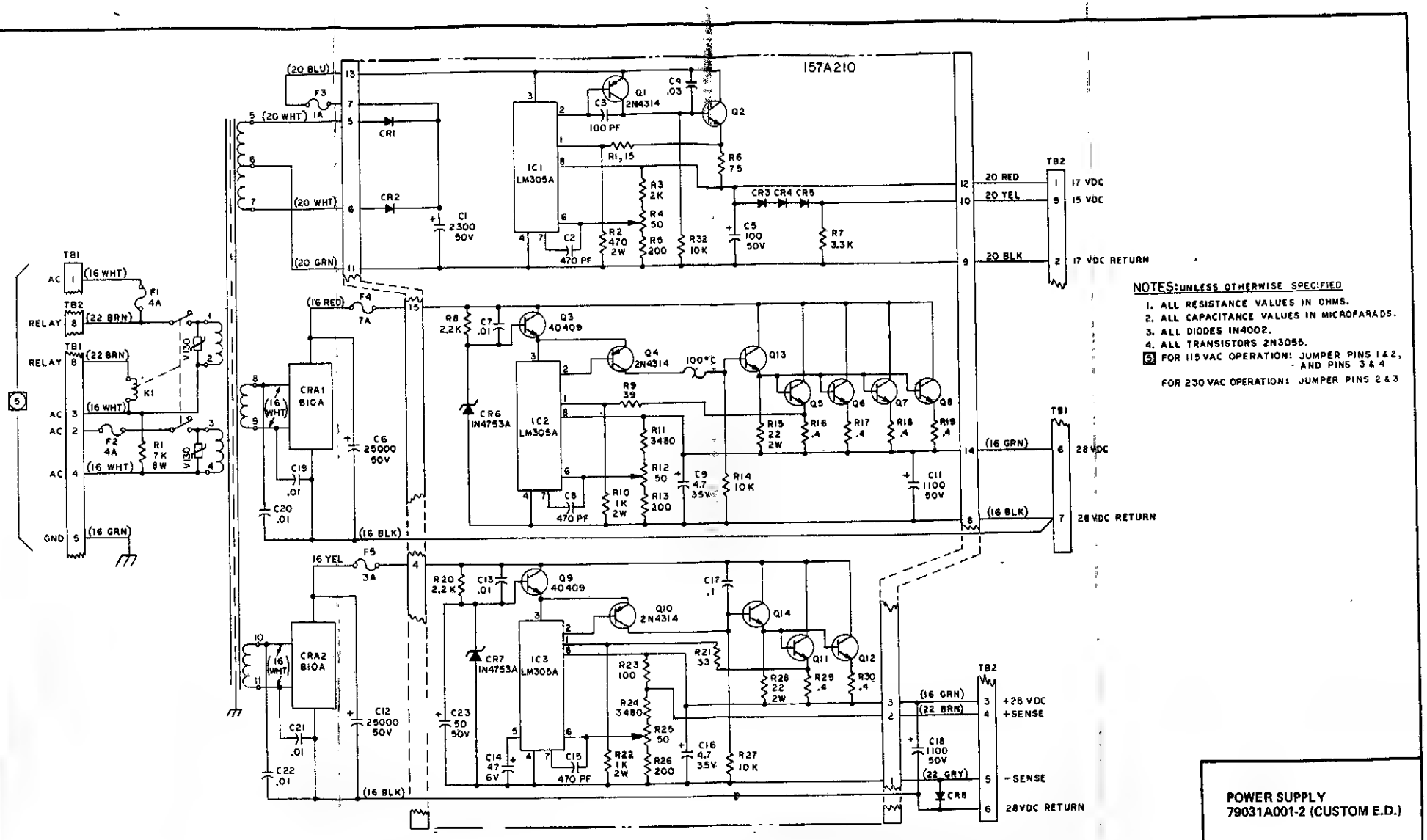

NOTES: UNLESS OTHERWISE SPECIFIED

1. ALL RESISTANCE VALUES IN OHMS.
2. ALL CAPACITANCE VALUES IN MICROFARADS.
3. ALL DIODES IN4002.
4. ALL TRANSISTORS 2N3055.
5. FOR 115 VAC OPERATION: JUMPER PINS 1 & 2, AND PINS 3 & 4

FOR 230 VAC OPERATION: JUMPER PINS 2 & 3

POWER SUPPLY
79031A001-2 (CUSTOM E.D.)

Figure 6-24. Power Supply 79031A001-2 (C)

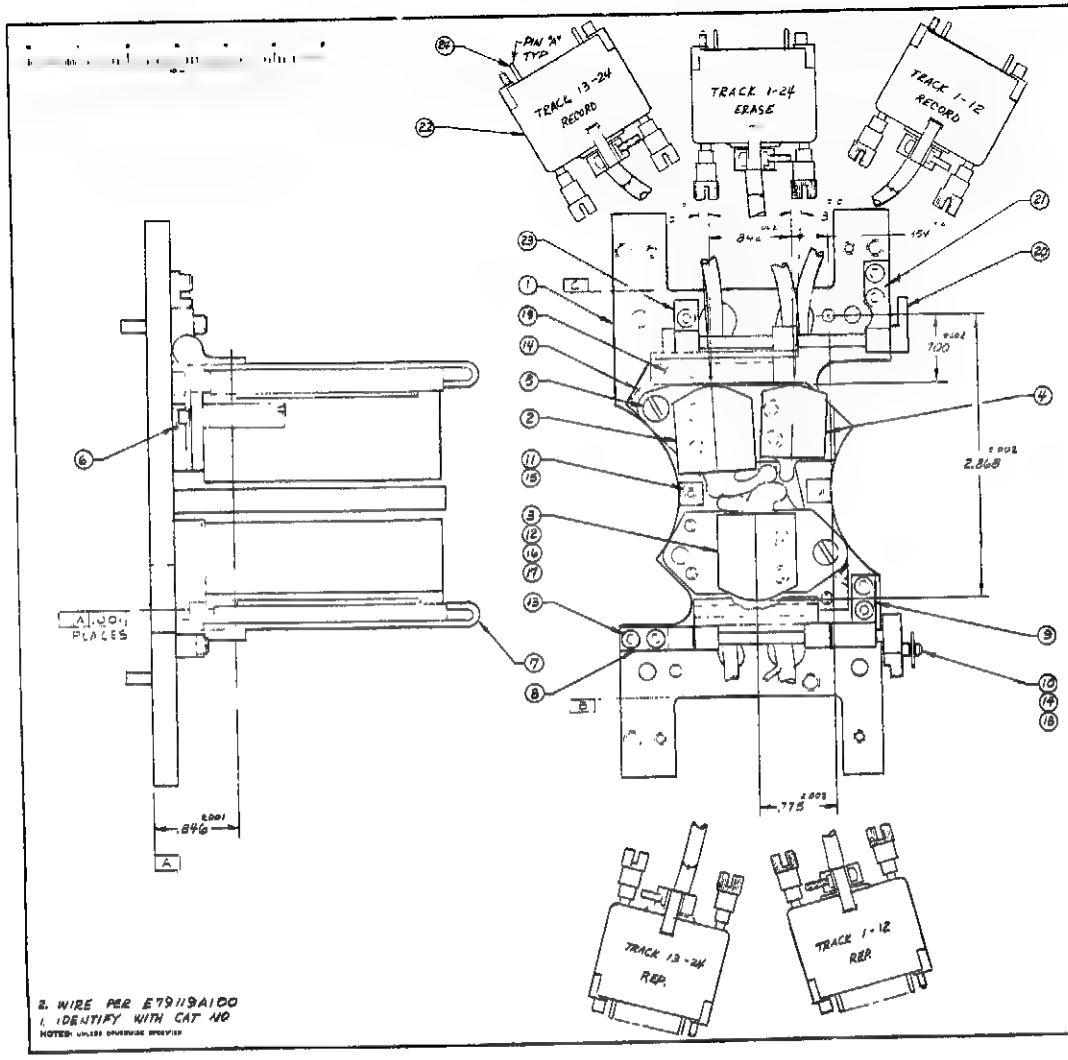

				25
122		83-1610-1331	CONTACT PIN	24
1	79119A008	83-3340-0798	SUPPORT-DOOR REAR	23
3		83-1610-1728	CONNECTOR-RECPT W/HOOD 26 PIN	22
1	79119A007	83-3340-0799	SUPPORT-DOOR REAR	21
1	79119A006	83-3210-0489	LEVEE-HEAD DOOR	20
1	79119A050	83-4330-0481	DOOR ASSY-RECORD	19
1		83 7270-0771	CLIP-RETAINER WIRE .063 WIDE	18
6		83 9261-4062	WASHER-FLAT #4	17
6		83-9261-9303	WASHER-LOCK SPLIT #4	16
2		83 9260-6573	SCREW-FLAT HD 4-40 X 3/8	15
3		83-9261-0270	SETSCREW, CUP POINT 4-40 X 3/16	14
7		83-9261-3002	SCREW-CAP SOC HD 4-40 X 3/8	13
6		83-9261-2001	SCREW-CAP SOC HD 4-40 X 1/4	12
2	56119A001-4	83-3340-0879	SUPPORT-TRIM HD COVER	11
1	56119A057	83-3210-0356	CRANK-ACTUATOR	10
1	56119A056	83-3340-0704	SUPPORT-DOOR REAR	9
1	56119A055	83-3340-0705	SUPPORT-DOOR FRONT	8
1	56119A050	83-4950-1415	SHIELD DOOR ASSY-2 INCH	7
2	09002-002	83-3950-0948	NUT-AZIMUTH	6
2	16002-008-4	83-3950-0939	SCREW-AZIMUTH	5

1	HA44H2210-4E2C00	83-0001-0351	HEAD-ERASE 24 TK AUDIO 2"	4
1	HA15B2210-4E2A00	83-0001-0349	HEAD-READ, 24TK AUDIO 2"	3
1	HA25B2210-4E2B00	83-0001-0350	HEAD-WRITE 24TK AUDIO 2"	2
1	56119A010	83-3950-1412	PLATE-HEAD MTG	1
QTY REQD	PART NO	CATALOG NO	DESCRIPTION	ITEM NO

HEAD SET ASSY - 24 TK
READ/WRITE/ERASE AUDIO
MODEL 79

79119A100

2. WIRE PER E79119A100
1. IDENTIFY WITH CAT NO
NOTES: UNLESS OTHERWISE SPECIFIED

SECTION VII
PARTS LISTS

7-1. GENERAL

7-2. This section contains the parts lists for the 3M Brand Series 79 Recorder. The parts lists are arranged in numerical order. To locate parts for an assembly, find the assembly by name or number in table 7-1 and turn to the indicated parts list. Use the assembly to make positive identification of the part, and then obtain the description, and part number and/or catalog number (preferably both) from the parts list.

7-3. ORDERING REPLACEMENT PARTS

7-4. Parts should be ordered through one of the 3M Company, Mincom Division, Field Engineering Offices listed in the front of this manual. Whenever a recorder is used in a critical application, it is recommended that the user maintain a minimum stock of spare parts. The 3M Company has specialized personnel ready to assist the user in making a selection of spare parts. When ordering parts, the following information should be supplied:

1. The description of the part obtained from the parts list.
2. The 3M Company catalog number.
3. The manufacturer's part number.
4. If an electrical part, the reference designator from the parts list or schematic.
5. The part number of the major assembly and its serial number, is applicable.

Table 7-1. Parts Lists

DESCRIPTION	PART NUMBER	PAGE
Kit - Accessory	79000A900	7-3
Reel Hub Group - Console 2 - 1 inch	79004A140	7-3
Reel Hub Group - Console 1/2 - 1/4 inch	79004A150	7-3
Motor Assembly - Takeup Reel, Wide Tape	79007A005	7-4
Motor Assembly - Supply Reel, Wide Tape	79007A010	7-4
Tape Transport Group - 2 inch Tape	79008A100	7-5
Tape Transport Group - 1 inch Tape	79008A200	7-5
Tape Transport Group - 1/2 inch Tape	79008A300	7-6
Tape Transport Group - 1/4 inch Tape	79008A400	7-6
Electronic Function Control Group	79010A100	7-7
Electronic Function Control Group - 2 Channel	79010A200	7-7
Electronic Function Control Group - 1 Channel	79010A300	7-8
Electronic Function Cable Assembly - 4 Channel	79010A105-1	7-8
Electronic Function Cable Assembly - 2 Channel	79010A105-2	7-8
Electronic Function Cable Assembly - 1 Channel	79010A105-3	7-9
Remote Function Control Group - 8 Channel	79010A400	7-9
Remote Function Control Group - 16 Channel	79010A500	7-10
Remote Function Control Group - 24 Channel	79010A600	7-10
Capstan Servo	79011E020	7-11
Capstan Servo Assembly	79011C000	7-14
Logic and Master Bias	79013D010-1	7-15
Logic and Master Bias	79013D010-2	7-21
Motor Driver Assembly	79013A030	7-27

Table 7-1. Parts Lists (Cont.)

DESCRIPTION	PART NUMBER	PAGE
Tape Transport Group - 2 inch Drive	79013A100	7-28
Tape Transport Group - 1/2 inch Drive	79013A200	7-29
Tape Transport Group - Common Parts	79013A400	7-30
Function Switch Assembly	79017A010	7-34
Extender, Master Remote	79017A013	7-34
Master Remote Assembly	79017C015	7-35
Master Control Assembly	79017C030	7-36
Cable Assembly - Remote, Transport 4 feet	79017B040-1	7-37
Cable Assembly - Remote, Transport 30 feet	79017B040-2	7-37
Cable Assembly - Remote, Signal Electronics 4 feet	79017B045-1	7-38
Cable Assembly - Remote, Signal Electronics 30 feet	79017B045-2	7-38
Mode Control Assembly - 8 Channel	79017A100	7-39
Mode Control Assembly - 16 Channel	79017A200	7-40
Mode Control Assembly - 24 Channel	79017A300	7-41
Remote Mode Control - Transport only	79017A400	7-43
Meter Lamp Assembly	79028A014	7-44
Transport Mounting Group - Console	79028A600	7-44
Meter Assembly, 24 Channel	79038B100	7-46
Meter Assembly, 16 Channel	79038B200	7-47
Meter Assembly, 8 Channel	79038B300	7-48
Meter Assembly, 4 Channel	79038A400	7-49
Meter Assembly, 2 Channel	79038A500	7-50
Meter Assembly, 1 Channel	79038A600	7-51
Meter Assembly,	79038A660	7-52
Meter Assembly,	79038A670	7-53
Meter Assembly,	79038A680	7-54
PCB Assembly, 8 Track with Input Transformer	79057A100	7-55
PCB Assembly, 8 Track without Input Transformer	79057A140	7-56
PCB Assembly-Term, 2 Track Repro only	79057A180	7-57
Signal Electronics Assembly	79059F010	7-58
Reproduce Signal Electronics	79059B020	7-62
Signal Electronics Housing Assembly, 24 Channel	79104A100	7-65
Signal Electronics Housing Assembly, 16 Channel	79104A200	7-67
Signal Electronics Housing Assembly, 8 Channel	79104A300	7-69
Signal Electronics Housing Assembly, 4 Channel	79104A400	7-71
Signal Electronics Housing Assembly, 2 Channel	79104A500	7-73
Signal Electronics Housing Assembly, 1 Channel	79104A600	7-75
Head Assembly, 24 Channel, Record/Reproduce	79119A100	7-77/7-78

Mincom Division 3M Company
300 SOUTH LEWIS ROAD • CAMARILLO, CALIFORNIA 93010

PARTS LIST	12578 CODE IDENT	PL 79000A900 SHEET OF	B REV

TITLE: KIT – ACCESSORY

CAT. NO.: 83-5990-1348

FIND NO.- DESIG	MFG NAME	MFG PART NO.	NOMENCLATURE OR DESCRIPTION	CAT. NO.	QTY
A52	MINCOM	79059A013	PCB ASSY – EXTENDER, SIG ELECT	83-4930-3324	1
1	MINCOM		MANUAL – INSTR, SERIES 79 REC	83-5990-1388	1

Mincom Division 3M Company
300 SOUTH LEWIS ROAD • CAMARILLO, CALIFORNIA 93010

PARTS LIST	12578 CODE IDENT	PL 79004A140 SHEET 1 OF 1	C REV

TITLE: REEL HUB GROUP – CONSOLE, 2–1 INCH

CAT. NO.: 83-5990-1340

FIND NO.- DESIG	MFG NAME	MFG PART NO.	NOMENCLATURE OR DESCRIPTION	CAT. NO.	QTY
1	MINCOM	79004A001	HUB REEL, 2 INCH	83-3240-0794	2
2	MIL STD		SCREW-SET, SOC HD, 10-32 X 3/8	83-9261-0104	2
3	MIL STD	MS51964-80	SETSCREW - HEX SOC, 5/16-24 X 1/2	83-9261-4403	2
4	GC ELECT	1711	BUTTON- PLUG, SPR TENS, .250 DIA	83-7270-0103	2
5	MINCOM	79000A027-1	COVER- TAPE TRANSPORT	83-3310-1728	1
6			SCREW-MACH, FH, 100D, 6-32 X 1/4	83-9260-0324	4

Mincom Division 3M Company
300 SOUTH LEWIS ROAD • CAMARILLO, CALIFORNIA 93010

PARTS LIST	12578 CODE IDENT	PL 79004A150 SHEET OF	C REV

TITLE: REEL HUB GROUP – CONSOLE, NARROW TAPE

CAT. NO.: 83-5990-1341

FIND NO.- DESIG	MFG NAME	MFG PART NO.	NOMENCLATURE OR DESCRIPTION	CAT. NO.	QTY
1	INTL	1000C	KNOB-HUB, REEL MTG, 1/4 X 1/2 IN	83-1270-0973	2
2	MINCOM	23013A192	COLLAR-SPLINED, REEL HUB	83-3230-0440	2
3	MINCOM	79013A193	BASE-REEL, HUB, SPINDLE	83-3240-0864	2
4	MINCOM	23013B191	SHAFT-SPINDLE, REEL HUB	83-3280-0861	2
5	MINCOM	79000A027-1	COVER-TAPE TRANSPORT	83-3310-1728	1
6			SCREW-MACH, FH, 100D, 6-32 X 1/4	83-9260-0324	4

Mincom Division 3M COMPANY
300 SOUTH LEWIS ROAD • CAMARILLO, CALIFORNIA 93010

PARTS LIST

12578 CODE IDENT | PL 79007A005 SHEET OF | B REV

TITLE: MOTOR ASSY — TAKE-UP REEL, WIDE TAPE

CAT. NO. 83-4560-0324

FIND NO.- DESIG	MFG NAME	MFG PART NO.	NOMENCLATURE OR DESCRIPTION	CAT. NO.	QTY
1	MINCOM	79000A033	MOTOR-REEL DRIVE	83-3560-0343	1
3	AMP	60620-4	PIN-CONTRACT, 18 - 14 AWC	83-1610-1246	2
4	MINCOM	79007A004	ADAPTOR-SENSOR	83-3210-0488	1
5	MIL STD	MS51017-34	SETSCREW-CUP PT 8-32 X 3/16	83-9261-0068	1
6	MINCOM	79000A014	PLATE-MTG, MOT, 1–2 INCH TAPE	83-3330-0468	1
7	MIL STD	MS35207-263	SCREW-MACH, PAN HD, 10-32 X 1/2	83-9260-4572	AR
8	MIL STD	MS27183-8	WASHER-FLAT, GENERAL PURPOSE, NO. 10	83-9261-4006	AR
007P8	AMP	1-480305-0	SHELL-CONN, RECT, 3 POS	83-1610-1142	1

Mincom Division 3M COMPANY
300 SOUTH LEWIS ROAD • CAMARILLO, CALIFORNIA 93010

PARTS LIST

12578 CODE IDENT | PL 79007A010 SHEET OF | C REV

TITLE: MOTOR ASSY — SUPPLY REEL, WIDE TAPE

CAT. NO. 83-4560-0325

FIND NO.- DESIG	MFG NAME	MFG PART NO.	NOMENCLATURE OR DESCRIPTION	CAT. NO.	QTY
1	MINCOM	79000A033	MOTOR-REEL DRIVE	83-3560-0343	1
007P9	AMP	1-480278-0	SHELL-CONN, RECT, 12 POSITIONS	83-1610-0931	1
3	MIN PREC BRG	LFSS-10-1/3	BRG-BALL, ANLR, PLAIN, .625 BORE	83-1230-0331	1
4	MINCOM	56004A106	TERM-LUG, MOD	83-3630-0600	2
5	MINCOM	56004A105	INDICATOR-FLAG, DIR SENSOR	83-3550-1825	1
6	MINCOM	56004A020	PC BD ASSY - DIRECTION SENSOR	83-4930-2825	1
7	MIL STD	MS51017-34	SETSCREW-CP PT, 8-32 X 3/16	83-9261-0068	1
8	HAMLIN	H-31	MAGNET-PERMANENT, BAR, 600-800	83-1190-0061	1
9	MINCOM	79007A009	BRACKET-PCB MTG, DIRECTION SENSOR	83-3320-2641	1
10	BIRNBACH	727	CLAMP-LOOP, 250 DIA, NYLON	83-7650-0084	1
11	MINCOM	79004A002	ADAPTOR-BRG, DIRECTION SENSOR	83-3210-0491	1
12	AMP	60620-4	PIN-CONTACT, CONN, 18–14 AWG	83-1610-1246	3
13	SMITH	2101	SPACER-RD NO. 6 SCREW SIZE .375 LG	83-9350-0099	3
14	MIL-STD	MS35207-263	SCREW-MACH, PAN HD, 10-32 X 1/2	83-9260-4572	AR
15	MIL STD	MS27183-8	WASHER-FLAT, GENERAL PURPOSE, NO. 10	83-9261-4006	AR
16	MINCOM	79000A014	PLATE-MTG, MOT, 1–2 INCH TAPE	83-3330-0468	1

Mincom Division 3M COMPANY
300 SOUTH LEWIS ROAD • CAMARILLO, CALIFORNIA 93010

PARTS LIST	12578 CODE IDENT	PL 79008A100 SHEET OF	E REV

TITLE: TAPE TRANSPORT GROUP – 2 IN TAPE

CAT. NO. 83-5990-1329

FIND NO.- DESIG	MFG NAME	MFG PART NO.	NOMENCLATURE OR DESCRIPTION	CAT. NO.	QTY
1	MINCOM	79008B002	BASE-TAPE GUIDE	83-3240-1089	4
2	MINCOM	79008A003-1	SHAFT-TAPE GUIDE	83-3280-1025	4
3	MINCOM	79008A001-1	SLEEVE-TAPE GUIDE, FIXED	83-3230-0633	2
4	MINCOM	79008A001-3	SLEEVE-TAPE GUIDE, 2 IN OUT	83-3230-0663	2

Mincom Division 3M COMPANY
300 SOUTH LEWIS ROAD • CAMARILLO, CALIFORNIA 93010

PARTS LIST	12578 CODE IDENT	PL 79008A200 SHEET OF	F REV

TITLE: TAPE TRANSPORT GROUP – 1 IN TAPE

CAT. NO. 83-5990-1330

FIND NO.- DESIG	MFG NAME	MFG PART NO.	NOMENCLATURE OR DESCRIPTION	CAT. NO.	QTY
1	MINCOM	79008A003-2	SHAFT-TAPE GUIDE	83-3280-1058	4
2	MINCOM	79008A001-2	SLEEVE-TAPE GUIDE, FIXED	83-3230-0640	2
4	MINCOM	79008B002	BASE-TAPE GUIDE	83-3240-1089	4
5	MINCOM	79008A001-4	SLEEVE-TAPE GUIDE, 1 IN OUT	83-3230-0664	2

Mincom Division 3M COMPANY
300 SOUTH LEWIS ROAD • CAMARILLO CALIFORNIA 93010

PARTS LIST	12578 CODE IDENT	PL 79008A300 SHEET OF	C REV

TITLE: TAPE TRANSPORT GROUP – 1/2 IN. TAPE

CAT. NO. 83-5990-1331

FIND NO.- DESIG	MFG NAME	MFG PART NO.	NOMENCLATURE OR DESCRIPTION	CAT. NO.	QTY
1	MINCOM	23013B013-2	TAPE GUIDE–INCOMING, 1/2 IN	83-3240-0627	2
2	MINCOM	23013B014-2	TAPE GUIDE–OUTGOING, 1/2 IN	3240-0633	2
3	MINCOM	23013A064-1	SCREW–MTG, TAPE GUIDE	3262-0537	4

Mincom Division 3M COMPANY
300 SOUTH LEWIS ROAD • CAMARILLO, CALIFORNIA 93010

PARTS LIST	12578 CODE IDENT	PL 79008A400 SHEET OF	C REV

TITLE: TAPE TRANSPORT GROUP – 1/4 IN TAPE

CAT. NO. 83-5990-1332

FIND NO.- DESIG	MFG NAME	MFG PART NO.	NOMENCLATURE OR DESCRIPTION	CAT. NO.	QTY
1	MINCOM	23013B013-1	TAPE GUIDE–INCOMING, 1/4 IN	83-3240-0626	2
2	MINCOM	23013B014-1	TAPE GUIDE–OUTGOING, 1/4 IN	83-3240-0632	2
6	MINCOM	23013A064-1	SCREW-MTG, TAPE GUIDE	83-3262-0537	4

Mincom Division 3M COMPANY
300 SOUTH LEWIS ROAD • CAMARILLO, CALIFORNIA 93010

PARTS LIST	12578 CODE IDENT	PL 79010A100 SHEET OF	C REV

TITLE: ELECTRONIC FUNCTION CONTROL GROUP – 4 CHANNEL

CAT. NO.: 83-5990-1342

FIND NO.- DESIG	MFG NAME	MFG PART NO.	NOMENCLATURE OR DESCRIPTION	CAT. NO.	QTY
2	MINCOM	79017A003	FRAME–MODE CONTROL, REMOTE	83-3340-0802	1
3	MINCOM	79017A010	PC BD ASSY– FUNCTION SWITCH	83-4930-3297	4
4	MINCOM	79017C015	PC BD ASSY– MASTER REMOTE	83-4930-3550	1
5	MINCOM	79000A047-1	PANEL–SWITCH, ELECTRONIC FUNCTION	83-3360-2014	1
6	MINCOM	79000A048	SUPPORT-SWITCH, ELECTRONIC FUNCTION	83-3340-0804	1
7	MINCOM	79010A105-1	CABLE ASSY- INTERCONNECTING, FUNCTION	83-4570-0890	1
8	MINCOM	79017B002-1	LABEL-IDENT, MODE CONTROL	83-3550-2303	4
9	MINCOM	79017B002-2	LABEL-IDENT, MODE CONTROL	83-3550-2304	4
10	MINCOM	79017B002-3	LABEL-IDENT, MODE CONTROL	83-3550-2305	4
11	MINCOM	79017B002-4	LABEL-IDENT, MODE CONTROL	83-3550-2307	4

Mincom Division 3M COMPANY
300 SOUTH LEWIS ROAD • CAMARILLO, CALIFORNIA 93010

PARTS LIST	12578 CODE IDENT	PL 79010A200 SHEET OF	C REV

TITLE: ELECTRONIC FUNCTION CONTROL GROUP–2 CHANNEL

CAT. NO.: 83-5990-1343

FIND NO.- DESIG	MFG NAME	MFG PART NO.	NOMENCLATURE OR DESCRIPTION	CAT. NO.	QTY
1					
2	MINCOM	79017A003	FRAME-MODE CONTROL, REMOTE	83-3340-0802	1
3	MINCOM	79017A010	PC BD ASSY- FUNCTION SWITCH	83-4930-3297	2
4	MINCOM	79017C015	PC BD ASSY-MASTER REMOTE	83-4930-3550	1
5	MINCOM	79000A047-2	PANEL-SWITCH, ELECTRONIC FUNCTION	83-3360-2015	1
6	MINCOM	79000A048	SUPPORT-SWITCH, ELECTRONIC FUNCTION	83-3340-0804	1
7	MINCOM	79010A105-2	CABLE ASSY – INTERCONNECTING FUNCTION	83-4570-0391	1
8	MINCOM	79017B002-1	LABEL-IDENT, MODE CONTROL	83-3550-2303	4
9	MINCOM	79017B002-2	LABEL-IDENT, MODE CONTROL	83-3550-2304	4

Mincom Division 3M COMPANY
300 SOUTH LEWIS ROAD • CAMARILLO CALIFORNIA 93010

PARTS LIST

12578 CODE IDENT | PL 79010A300 SHEET OF | C REV

TITLE: ELECTRONIC FUNCTION CONTROL GROUP - 1 CHANNEL

CAT. NO. 83-5990-1344

FIND NO.- DESIG	MFG NAME	MFG PART NO.	NOMENCLATURE OR DESCRIPTION	CAT. NO.	QTY
1	MINCOM	79017A003	FRAME–MODE CONTROL, REMOTE	83-3340-0802	1
2	MINCOM	79017C015	PC BD ASSY-MASTER REMOTE	83-4930-3550	1
3	MINCOM	79000A047-3	PANEL-SWITCH, ELECTRONIC FUNCTION	83-3360-2016	1
4	MINCOM	79000A048	SUPPORT-SWITCH, ELECTRONIC FUNCTION	83-3340-0804	1
5	MINCOM	79010A105-3	CABLE ASSY-INTERCONNECTING, FUNCTION	83-4570-0892	1

Mincom Division 3M COMPANY
300 SOUTH LEWIS ROAD • CAMARILLO, CALIFORNIA 93010

PARTS LIST

12578 CODE IDENT | PL 79010A105-1 SHEET OF | B REV

TITLE: CABLE ASSEMBLY-ELECTRONIC FUNCTION, FOUR CHANNEL

CAT. NO. 83-4570-0890

FIND NO.- DESIG	MFG NAME	MFG PART NO.	NOMENCLATURE OR DESCRIPTION	CAT. NO.	QTY
013P4	VIKING	2VK18S/1-2	CONN-PC, ELEC, PIERCD, 18 CON	83-1610-0796	1
017P1, 017P2, 017P3, 017P4	VIKING	2VK15S/1-2	CONN-PC, ELEC, PIERCD, 15 CON	83-1610-0797	4
017P5	VIKING	2VK18D/1-2	CONN-PC, ELEC, PIERCD, 36 CON	83-1610-0782	1
059P8	VIKING	2VK22S/1-2	CONN-PC, ELEC, PIERCD, 22 CON	83-1610-0845	1
1	VIKING	091-0024-000	INSERT-POLARIZING, CONN, .300 LG	83-1610-0760	7

Mincom Division 3M COMPANY
300 SOUTH LEWIS ROAD • CAMARILLO, CALIFORNIA 93010

PARTS LIST

12578 CODE IDENT | PL 79010A105-2 SHEET OF | B REV

TITLE: CABLE ASSEMBLY-ELECTRONIC FUNCTION, TWO CHANNEL

CAT. NO. 83-4570-0891

FIND NO.- DESIG	MFG NAME	MFG PART NO.	NOMENCLATURE OR DESCRIPTION	CAT. NO.	QTY
013P4	VIKING	2VK18S/1-2	CONN-PC, ELEC, PIERCD, 18 CON	83-1610-0796	1
017P1, 017P2	VIKING	2VK15S/1-2	CONN-PC, ELEC, PIERCD, 15 CON	83-1610-0797	2
017P5	VIKING	2VK18D/1-2	CONN-PC, ELEC, PIERCD, 36 CON	83-1610-0782	1
059P8	VIKING	2VK22S/1-2	CONN-PC, ELEC, PIERCD, 22 CON	83-1610-0845	1
1	VIKING	091-0024-000	INSERT-POLARIZING, CONN .300 LG	83-1610-0760	5

Mincom Division 3M COMPANY 300 SOUTH LEWIS ROAD • CAMARILLO, CALIFORNIA 93010	PARTS LIST	12578 CODE IDENT	PL 79010A105-3 SHEET OF	B REV
	TITLE CABLE ASSEMBLY-ELECTRONIC FUNCTION, ONE CHANNEL		CAT. NO. 83-4570-0892	

FIND NO.- DESIG	MFG NAME	MFG PART NO.	NOMENCLATURE OR DESCRIPTION	CAT. NO.	QTY
013P4	VIKING	2VK18S/1-2	CONN-PC, ELEC, PIERCD, 18 CON	83-1610-0796	1
017P5	VIKING2	2VK18P/1-2	CONN-PC, ELEC, PIERCD, 18 CON	83-1610-0782	1
059P8	VIKING2	2VK22S/1-2	CONN-PC, ELEC, PIERCD, 22 CON	83-1610-0845	1
1	VIKING	091-0024-000	INSERT-POLARIZING, CONN, .300 LG	83-1610-0760	3

Mincom Division 3M COMPANY 300 SOUTH LEWIS ROAD • CAMARILLO, CALIFORNIA 93010	PARTS LIST	12578 CODE IDENT	PL 79010A400 SHEET OF	B REV
	TITLE REMOTE FUNCTION CONTROL GROUP-8 CHANNEL		CAT. NO. 83-5990-1370	

FIND NO.- DESIG	MFG NAME	MFG PART NO.	NOMENCLATURE OR DESCRIPTION	CAT. NO.	QTY
W1	MINCOM	79017B040-2	CABLE ASSEMBLY-REMOTE, SIG ELECT	83-4570-0905	1
W2	MINCOM	79017B045-2	CABLE ASSEMBLY-REMOTE, SIG ELECT, 30 FT	83-4570-0889	1
1	MINCOM	79017A100	MODE CONTROL ASSY-8 CHANNEL	83-5920-1912	1
2	AMATOM	8577-B-1032	SPACER-HEX, TAP, 10-32 X .875 LG	83-9350-0477	2
3	AMATOM	6192-B-1032-4	SCR-EXT, CAPTIVE, 10-32 X .250 LG	83-9262-0709	1

PARTS LIST	12578 CODE IDENT	PL 79010A500	E REV
TITLE REMOTE FUNCTION CONTROL GROUP-16 CHANNEL		CAT. NO. 83-5990-1371	

FIND NO.- DESIG	MFG NAME	MFG PART NO.	NOMENCLATURE OR DESCRIPTION	CAT. NO.	QTY
W1	MINCOM	79017B040-2	CABLE ASSEMBLY-REMOTE, SIG ELECT	83-4570-0905	1
W2,W3	MINCOM	79017B045-2	CABLE ASSEMBLY-REMOTE, SIG ELEC, 30 FT	4570-0889	2
1	MINCOM	79017A200	MODE CONTROL ASSY-16 CHANNEL	5920-1895	1
2	AMATOM	8577-B-1032	SPACER-HEX, TAP, 10-32 X .875 LG	9350-0477	2
3	AMATOM	6192-B-1032-4	SCR-EXT, CAPTIVE, 10-32 X .250 LG	9262-0709	1

PARTS LIST	12578 CODE IDENT	PL 79010A600	E REV
TITLE REMOTE FUNCTION CONTROL GROUP-24 CHANNEL		CAT. NO. 83-5990-1372	

FIND NO.- DESIG	MFG NAME	MFG PART NO.	NOMENCLATURE OR DESCRIPTION	CAT. NO.	QTY
W1	MINCOM	79017B040-2	CABLE ASSEMBLY-REMOTE, SIG ELECT	83-4570-0905	1
W2,W3,W4	MINCOM	79017B045-2	CABLE ASSEMBLY-REMOTE, SIG ELEC, 30 FT.	4570-0889	3
1	MINOCM	79017A300	MODE CONTORL ASSY-24 CHANNEL	5930-1913	1
2	AMATOM	8577-B-1032	SPACER-HEX, TAP, 10-32 X .875 LG	9350-0477	2
3	AMATOM	6192-B-1032-4	SCR-EXT, CAPTIVE, 10-32 X .250 LG	9262-0709	1

3M Mincom Division
MINNESOTA MINING AND MANUFACTURING CO.

PARTS LIST

12578 CODE IDENT | PL 79011E020 | D REV

TITLE: PC BD ASSY-CAPSTAN SERVO

CAT. NO. 83-4930-3604

FIND NO.- DESIG	MFG NAME	MFG PART NO.	NOMENCLATURE OR DESCRIPTION	CAT. NO.	QTY
	MINCOM	CE79000A700	COMPOSITE SCHEM-AUDIO MASTERING SYSTEM	83-4700-0058	AR
C1,C9	MINCOM	0A839-4171	CAP-FXD, MP, .0022 UF, 200 VDC, 5%	1510-4171	2
C2	MIL STYLE	CS13BF105K	CAP-FXD, TA, 1 UF, 35V, 10%	1510-6111	1
C3,C16	MIL STYLE	CS13BF475K	CAP-FXD, TA, 4.7 UF, 35V, 10%	1510-6095	2
C4	MIDWEC	E3FR-152-1C	CAP-FXD, PLSTC, .0015UF, 100V, 5%	1510-4443	1
C5,C12	MIL STYLE	CS13BF225K	CAP-FXD, TA, 2.2UF, 35V, 10%	1510-6093	2
C6	COMP INC	CCT-035-154-10	CAP-FXD, TA, .15UF, 35 WVDC, 10%	1510-6408	1
C7	MINCOM	0A839-4165	CAP-FXD, METAL, .015 UF,200V, 20%	1510-4165	1
C8	MINCOM SPEC	0A839-6021	CAP-FXD, MP, .0056 UF, 200VDC, 5%	1510-6021	1
C10,C13	MIL STYLE	CS13BF156K	CAP-FXD, TA, 15UF, 35V, 10%	1510-6185	2
C11	ARCO	DM15821F	CAP-FXD, MICA, 820 PF,300V, 1%	1510-5395	1
C14	MIL STYLE	CSR13E106KL	CAP-FXD, TA, 10UF, 20V, 10%	1510-6068	1
C15,C17	MINCOM	0A836-5155	CAP-FXD, MICA, 100PF, 500V, 5%	1510-5155	2
C18	SPRAGUE	225P10391	CAP-FXD, PLSTC, .01 UF, 100 VDC	1510-4610	1
C20	MIL STYLE	CSR13D226KM	CAP-FXD, TA, 22 UF, 15VDC, 10%	1510-6113	1
CR1	MOTOROLA	MPU133	TSTR-SI, PNPN, UNIJUNCTION	1530-2455	1
CR2	TEXAS INST	1N914	DIODE-SI, SWITCHING, 100 PIV	1530-0083	1
CR3	JEDEC	1N270	DIODE-DE, GEN PUR, 100 PIV, 60 MA	1530-0263	1
CR4,CR5	MOTOROLA	1N4004	RECTIFIER-SILICON DIODE	1530-0151	2
IC1	FAIRCHILD	U6E7739393	INT CIR-DUAL OPERATIONAL AMP	1530-8156	1
IC2,IC3	SIGNETICS	SP380A	INT CIR-QUAD 2, INPUT GATE	1530-8084	2
IC4	FAIRCHILD	U5R7723393	INTEGRATED CIRCUIT, VOLTAGE REG.	1530-8109	1
L1,	NYTRONICS	WEE-330	INDUCT- FXD, RF,330 UH, 240 MA	1540-0541	1
Q1,Q2,Q3	FAIRCHILD	2N3643	TSTR-SI, NPN, SWITCHING, 300 HFE	1530-2234	3
Q4	RCA	2N2270	TSTR-SI, NPN, HIGH PWR, 200 HFE	1530-2059	1

3M Mincom Division
MINNESOTA MINING AND MANUFACTURING CO.

PARTS LIST

12578 CODE IDENT | PL 79011E020 | D REV

TITLE: PC BD ASSY-CAPSTAN SERVO

CAT. NO. 83-4930-3604

FIND NO.- DESIG	MFG NAME	MFG PART NO.	NOMENCLATURE OR DESCRIPTION	CAT. NO.	QTY
R1,R2	OHMITE	LITTLE DEVIL	RES-CARB, 56K OHM, 1/4W, 5%	83-9520-2113	2
R3,R21	OHMITE	LITTLE DEVIL	RES-FXD, COMP, 18 OHM, 1/4W, 5%	9520-2242	2
R4,R19	OHMITE	LITTLE DEVIL	RES-CAR, 3.3K OHM, 1/4W, 5%	9520-2095	2
R5,R10,R47	OHMITE	LITTLE DEVIL	RES-FXD, COMP, 2.7K OHM, 1/4W, 5%	9520-2098	3
R6,R36	OHMITE	LITTLE DEVIL	RES-FXD, COMP, 1.5K OHM,1/4W, 5%	9520-2117	2
R7	OHMITE	LITTLE DEVIL	RES-FXD, COMP, 3.9K OHM, 1/4W, 5%	9520-2096	1
R8,R50	OHMITE	LITTLE DEVIL	RES-CAR, 47 OHM, 1/4W, 5%	9520-2125	2
R9,R23	OHMITE	LITTLE DEVIL	RES-FXD, COMP, 1.2K OHM, 1/4W, 5%	9520-2102	2
R11	MINCOM SPEC	0A812-0219	RES-FXD, FILM, 12.1K OHM, 1/4W, 1%	1520-0219	1
R12	CORNING GLASS	RL7S1002F	RES-FXD, FILM, 10K OHM, 1/4W, 1%	1520-0217	1
R13	BECKMAN	89PR1K	RES-VAR, CER, 1K OHM, 3/4W, 20%	1520-1574	1
R14	MINCOM SPEC	0A812-0197	RES-FXD, FILM, 1.78K OHM, 1/4W, 1%	1520-0197	1
R15	BECKMAN	89PR100K	RES-VAR, CER, 100K OHM, 3/4W, 20%	1520-1576	1
R16,R18	OHMITE	LITTLE DEVIL	RES-FXD, COMP, 15K OHM, 1/4W, 5%	9520-2120	2
R17	OHMITE	LITTLE DEVIL	RES-FXD, COMP, 33K OHM, 1/4W, 5%	9520-2109	1
R20	OHMITE	LITTLE DEVIL	RES-FXD, COMP, 220K OHM,1/4W, 5%	9520-2121	1
R22	OHMITE	LITTLE DEVIL	RES-FXD, COMP, 15K OHM, 1/4W, 5%	9520-2120	1
R24	MINCOM	0A781-7387	RES-FXD, FILM, 100 K OHM, 1/2W, 2%	1520-7387	1
R25	MINCOM	0A781-7399	RES-FXD, FILM, 470K OHM, 1/2W, 2%	1520-7399	1
R26	MINCOM	0A781-7395	RES-FXD, FILM, 330KOHM,1/2W, 2%	1520-7395	1
R27	OHMITE	LITTLE DEVIL	RES-FXD, COMP, 100 OHM, 1/4W, 5%	9520-2094	1
R28	OHMITE	LITTLE DEVIL	RES-CAR, 620 OHM, 1/4W, 5%	9520-2141	1
R29	OHMITE	LITTLE DEVIL	RES-FXD, COMP, 100K OHM,1/4W, 5%	9520-2119	1
R31	OHMITE	LITTLE DEVIL	RES-FXD, COMP, 390 OHM, 1/4W, 5%	9520-2137	1
R32	MINCOM	0A781-7360	RES-FXD, FILM, 2.2K OHM, 1/2W, 2%	1520-7360	1
R34	OHMITE	LITTLE DEVIL	RES-FXD, COMP, 470 OHM, 1W, 5%	9520-4087	1
R35	OHMITE	LITTLE DEVIL	RES-FXD, COMP, 5.1K OHM, 1/4W, 5%	9520-2153	1
R37	MINCOM	0A812-0191	RES-FXD, FILM, 825 OHM, 1/4W, 1%	1520-0191	1
R38	MINCOM	0A812-0199	RES-FXD, FILM, 2.21K OHM, 1/4W, 1%	1520-0199	1
R39	MINCOM	0A812-0286	RES-FXD, FILM, 7.68K OHM, 1/4W, 1%	1520-0286	1
R40	OHMITE	LITTLE DEVIL	RES-FXD, COMP, 2.2K OHM, 1/4W, 5%	9520-2110	1
R41	BECKMAN	89PR200	RES-VAR, CER, 200 OHM, 3/4W, 20%	1520-1572	1
R42	BECKMAN	89PR500	RES-VAR, CER, 500 OHM, 3/4W, 20%	1520-1573	1
R43	BECKMAN	89PR5K	RES-VAR, CER, 5K OHM, 3/4W, 20%	1520-1586	1

3M Mincom Division (MINNESOTA MINING AND MANUFACTURING CO.)	PARTS LIST	12578 CODE IDENT	PL 79011E020	D REV
	TITLE PC BD ASSY-CAPSTAN SERVO		CAT. NO. 83-4930-3604	

FIND NO.- DESIG	MFG NAME	MFG PART NO.	NOMENCLATURE OR DESCRIPTION	CAT. NO.	QTY
R44	OHMITE	LITTLE DEVIL	RES-FXD, COMP, 5.6 OHM, 1/2W, 5%	83-9520-3262	1
R46	OHMITE	LITTLE DEVIL	RESISTOR-CAR, 75 OHM, 1/4W, 5%	9520-2129	1
R48	OHMITE	LITTLE DEVIL	RES-FXD, COMP, 3K OHM, 1/4W, 5%	9520-2150	1
R51	OHMITE	LITTLE DEVIL	RES-FXD, COMP, 560KOHM,1/4W, 5%	9520-2187	1
R30,R33,R49	OHMITE	LITTLE DEVIL	RES-FXD, COMP, 10K OHM, 1/4W, 5%	9520-2112	3
T1	ADC	3-19230	XFMR-AUD, STEP-DN, OUTPUT	1540-1339	1
TP1	AMP INC	2-582118-0	JACK-TEST, .156 WD X .230 HT, BLK	1610-0764	1
TP2	AMP INC	2-582118-9	JACK-TEST,.156 WD X .230 HT, WHT	1610-0763	1
1	MINCOM	79011E021	PC4696 CAPSTAN SERVO	3640-2307	1
2	WAKEFIELD	NF-207	HEAT SINK-DISSIPATOR, TO-5 CASE	1690-0318	2
3	AMP	583527-1	SOCKET-IC, 14 PIN DUAL IN LINE	1620-0273	4
4	ANSLEY	634-1	HEADER, DUAL INLINE PACKAGE	1610-1671	1

3M Mincom Division

PARTS LIS	12578 CODE IDENT	PL 79011C000	F REV

TITLE: CAPSTAN SERVO ASSY

CAT. NO. 83-5920-1970

FIND NO.	DESIG.	MFG NAME	MFG PART NO	NOMENCLATURE OR DESCRIPTION	CAT NO.	QTY
		MINCOM	E79011C000	CAPSTAN SERVO ASSY-AUDIO MASTERING SYSTEM	83-	AR
A1		MINCOM	79011E020	PCB ASSY-CAPSTAN SERVO	4930-3604	1
B1		MINCOM	79011A005	MOTOR ASSEMBLY-CAPSTAN SERVO	4560-0309	1
PM		MINCOM	79011A014	POLE PIECE-MAGNETIC DISK	3550-0052	1
011P7		AMP	480324-0	SHELL-CONN, RECT, 15 POSITION PIN CIRCUIT	1610-0933	1
PU1		MINCOM	79011A011	PC 3260-TACH PICKUP	3640-2053	1
Q5		RCA	2N3055	TSTR-SI, NPN, PWR, 100 VCB	1530-2157	1
Q6		MOTOROLA	2N3791	TSTR-SI, PNP, HIGH PWR, 180 HFE	1530-2320	1
R45		DALE	CW-2C	RESISTOR-FXD, WW, 0.25Ω, 2.5W	1520-8432	1
TB1		ALCON	4-1579	TERM BD-GND, 2 CONT	1640-1032	1
XA1		VIKING	2VK18S/1-2	CONNECTOR-PC, PIERCD, 18 CONN	1610-0796	1
1		MINCOM	79011A001	CHASSIS-CAPSTAN SERVO	3310-1714	1
2		MINCOM	79011A002	SPACER-CAPSTAN MOTOR	3350-0786	1
3		MINCOM	79011A003	SHIELD-ELECTROMAGNETIC	3650-0678	1
4		MINCOM	79011A004	PLATE-NUT	3320-2531	1
5		MINCOM	79011A007	PLATE-SUPPORT, TACHOMETER	3320-2532	1
6		MINCOM	79011A008	ARMATURE-TACHOMETER	3220-0453	1
7		MINCOM	79011A009	HOUSING-TACHOMETER, STEEL	3310-1753	1
8		MINCOM	79011A012	COVER-TACHOMETER	3310-1715	1
9		ASSOCIATED SPRING CORP	U125-0060	WASHER-CURVED, .135 ID, .245 OD, .006 THK	9262-0685	6
10		MIL STD	MS16997-37	SCREW-CAP, SOCKET HD, HEX, 8-32 X 1.25 LG	9261-2064	2
11		AMP	60618-4	CONTACT, PIN, #22-#18	1610-0925	15
12		MIL STD	MS51963-9	SCREW-SET, HEADLESS HEX RECESSED	9261-0278	2
13		NYLOK	M35AS632-4C	SCR-MACH, TRUSS. H, 6-32 X 1/4	9262-0712	4
14		BIRNBACH	#727	CLAMP-LOOP, .250 DIA NYLON	7650-0084	1
15		MOTOROLA	MK15	TSTR MOUNTING KIT	1530-2023	2
16		MINCOM	79011A007	BRACKET-TRANSISTOR MTG	3320-2782	1

3M Mincom Division (Minnesota Mining and Manufacturing Co.)	PARTS LIST	12578 CODE IDENT	PL 79013D010 -1	F REV
	TITLE PCB ASSY-LOGIC & MASTER BIAS SUPPLY		CAT. NO. 83-4930-3639	

FIND NO.- DESIG	MFG NAME	MFG PART NO	NOMENCLATURE OR DESCRIPTION	CAT. NO.	QTY
				83-	
C1	CORNELL-DUB	BR250-50	CAP-FXD, ELECT, 250 UF, 50V	1510-2031	1
C2,C9,C10	CENTRALAB	UK10-503	CAP-FXD, CER, .05 UF, 10 WVDC	1510-2307	3
C3,C4	COMP INC	CCM-035-105-10	CAP-FXD, TA, 1 UF, 35 WVDC, 10%	1510-6413	2
C5	COMP INC	CCZ-035-106-10	CAP-FXD, TA, 10 UF, 35 WVDC, 10%	1510-6422	1
C6,C11,C14	COMP INC	CCZ-025-336-10	CAP-FXD, TA, 33 UF, 25 WVDC, 10%	1510-6434	3
C8,C15,C17	SPRAGUE	109D107 X 0025F2	CAP-FXD, TA, 100 UF, 25V, 20%	1510-6222	3
C12,C13	COMP INC	CCD-035-685-10	CAP-FXD, 6.8 UF, 35 WVDC, 10%	1510-6420	2
C16		CSR13D157KL	CAP-FXD, TA, 150 UF 15V, 10%	1510-6163	1
C21 ,C31	CENTRALAB	DDM-103	CAP-FXD, CER, .01 UF, 150V, 40%	1510-1048	2
C22,C23	MINCOM	0A839-4584	CAP-FXD, MET P, .0047 UF, 200 V/S	1510-4584	2
C24	ARCO	TYPE 311	CAP-VAR, MICA, 780-2110 PF, 250V	1510-6274	1
C25	ARCO	DM19F512J	CAP-FXD, MICA, 5100 PF, 500V, 5%	1510-5279	1
C26	MINCOM	0A839-4499	CAP-FXD, PLSTC, .1 UF, 200 VDC, 5%	1510-4499	1
C27	COMP INC	CCT-035-334-10	CAP-FXD, TA, .33 UF, 35 WVDC, 10%	1510-6410	1
C28	COMP INC	CCH-010-227-10	CAP-FXD, TA, 220 UF, 10 WVDC, 10%	1510-6445	1
C29	COMP INC	CCT-035-474-10	CAP-FXD, TA, .47 UF, 35 WVDC, 10%	1510-6411	1
C30		CSR13F476KL	CAP-FXD, TA,47UF, 35V, 10%	1510-6146	1
C32, C33	CORNING	TD3-035-475-20	CAP-FXD, TA, 4.7 UF, 35V, 20%	1510-6210	2
CR1	MOTOROLA	2N5062	RECTIFIER-SI, CONT, PNPN	1530-0529	1
CR2,CR3,CR4,CR5, CR6,CR7,CR8,CR11 CR12,CR13,CR14, CR15,CR16,CR17, CR18,CR19,CR20, CR22,CR23,CR24, CR25,CR26,CR27, CR28,CR29,CR30, CR31,CR32,CR33, CR34,CR35,CR36,	HUGHES	1N270	DIODE-GE, GEN PUR, 100 PIV, 60 MA	1530-0263	114

3M Mincom Division

PARTS LIST

12578 CODE IDENT

PL 79013D010-1

F REV

TITLE PCB ASSY-LOGIC & MASTER BIAS SUPPLY

CAT. NO. 83-4930-3639

FIND NO.- DESIG	MFG NAME	MFG PART NO.	NOMENCLATURE OR DESCRIPTION	CAT. NO	QTY
CR37,CR38,CR39, CR40,CR41,CR42, CR43,CR44,CR45, CR46,CR47,CR48, CR49,CR50,CR51, CR52,CR53,CR54, CR55,CR56,CR57, CR58,CR59,CR60, CR61,CR62,CR63, CR64,CR65,CR66, CR67,CR68,CR69, CR70,CR71,CR72, CR73,CR74,CR75, CR76,CR77,CR78, CR79,CR80,CR81, CR82,CR83,CR84, CR85,CR86,CR87, CR88,CR89,CR90, CR91,CR92,CR93, CR94,CR97,CR98, CR99,CR101,CR104, CR105,CR106, CR107,CR109, CR110,CR112, CR113,CR114, CR117,CR122, CR123,CR124, CR125,CR126, CR127,CR129, CR130,CR131,CR132 CR9,CR10,CR21, CR95,CR96,CR100, CR102,CR103,CR121	MOTOROLA	1N4004	RECT-SI, DIF JCT, 400 PIV, 1 AMP	83- 1530-0151	9

3M Mincom Division	PARTS LIST	12578 CODE IDENT	PL 79013D010-1	F REV
	TITLE PCB ASSY-LOGIC & MASTER BIAS SUPPLY		CAT NO 83-4930-3639	

FIND NO.- DESIG	MFG NAME	MFG PART NO.	NOMENCLATURE OR DESCRIPTION	CAT. NO.	QTY
CR108,CR111	WESTINGHOUSE	1N1200AR	DIODE-SI, PWR, 100 PIV, 12 AMP	83-1530-0137	2
CR115	JEDEC	1N4740A	DIODE-SI, ZENER, 10 V, 1 W	1530-0389	1
CR116	MOTOROLA	1N4744A	DIODE-SI, ZENER, 15V, 1W, 5%	1530-0436	1
CR128,CR133 CR134	TEXAS INSTR	1N914	DIODE-SI, SWITCHING, 100 PIV	1530-0083	[illegible]
IC1	FAIRCHILD	U6A7741-393	INT CIR-OPERATIONAL AMP	1530-8136	1
K1,K2,K3,K4	POTTER&BRUM	KHP17D12-24	RELAY-4 PDT, 24 VDC, 650 OHM	1550-3678	4
L1	NYTRONICS	WEE-470	INDUCT-FXD, RF, 470 UH, 180 MA	1540-0543	1
L2	NYTRONICS	WEE-100	INDUCT-FXD, RF, 100UH, 345 MA	1540-0535	1
Q1,Q3,Q5,Q7,Q10 Q12,Q14,Q16,Q18, Q29,Q31,Q35,Q37, Q41,Q43	FAIRCHILD	2N3644	TSTR-SI, PNP, SWITCHING, 270 HFE	1530-2269	15
Q2,Q4,Q6,Q8,Q9, Q11,Q13,Q15,Q17, Q19,Q20,Q21,Q22, Q23,Q24,Q25,Q26, Q27,Q33,Q34,Q38, Q39,Q40,Q42,Q44, Q45,Q46,Q47,Q50	FAIRCHILD	2N3643	TSTR-SI, NPN, SWITCHING, 300 HFE	1530-2234	29
Q28,Q30,Q36,	RCA	2N3053	TSTR-SI, NPN, PWR, 60 VCB	1530-2180	3
Q32	RCA	2N3054	TSTR-SI, NPN, H PWR, 100 HFE	1530-2227	1
Q48,Q51	MOTOROLA	2N2219A	TSTR-SI, NPN, SW, 75VCB	1530-2154	2
Q49	MOTOROLA	MJ900	TSTR-SI, PNP, MISC, DARLINGTON	1530-2459	1

3M Mincom Division
MINNESOTA MINING AND MANUFACTURING CO

PARTS LIST

12578 CODE IDENT | PL 79013D010-1 | F REV

TITLE: PCB ASSY-LOGIC & MASTER BIAS SUPPLY

CAT. NO. 83-4930-3639

FIND NO.- DESIG	MFG NAME	MFG PART NO	NOMENCLATURE OR DESCRIPTION	CAT. NO.	QTY
R1,R6,R12,R32, R40,R43,R51,R154, R161	MINCOM	0A871-7346	RES-FXD, FILM, 200 OHM, 1/2W, 2%	83-1520-7346	9
R2,R5,R13,R16, R33,R39,R44,R50	OHMITE	LITTLE DEVIL	RES-FXD, COMP, 1.5K OHM, 1/4W, 5%	9520-2117	8
R3,R4,R7,R14,R15 R18,R23, R31, R34,R35,R38,R45, R46,R49,R60,R71, R72,R79,R82,R83, R88,R89,R101, R102,R106,R107, R113,R118,R120, R121,R122,R123, R124,R125	OHMITE	LITTLE DEVIL	RES-FXD, COMP, 4.7K OHM, 1/4W, 5%	9520-2111	34
R8,R9,R20,R21, R25,R28,R30,R36, R41,R47,R52	OHMITE	LITTLE DEVIL	RES-FXD, COMP, 2.7K OHM, 1/4W, 5%	9520-2098	11
R10,R37,R48, R103,R108,R149	OHMITE	LITTLE DEVIL	RES-FXD, COMP, 510 OHM, 1/4W, 5%	9520-2139	6
R11,R22,R27, R42,R53,R58,R62, R68,R73,R80,R90, R94,R98,R104, R112,R114,R116, R126,R130,R131, R133,R134,R136, R137,R144,R147, R84	OHMITE	LITTLE DEVIL	RES-FXD, COMP, 1K OHM, 1/4W, 5%	9520-2088	27
R17,R153,R156	OHMITE	LITTLE DEVIL	RES-FXD, COMP, 200 OHM, 1/4W, 5%	9520-2132	3
R19	CORNING	RL20S511G	RES-FXD, FILM, 510 OHM, 1/2W, 2%	1520-7354	1
R54	OHMITE	LITTLE DEVIL	RES-FXD, COMP, 5.6K OHM, 1/4W, 5%	9520-2154	1
R171, R26	OHMITE	LITTLE DEVIL	RES-FXD, COMP, 120K OHM, 1/4W, 5%	9520-2175	2
R173	OHMITE	LITTLE DEVIL	RES-FXD, COMP, 11K OHM, 1/4W, 5%	9520-2158	1

3M Mincom Division

PARTS LIST

12578 CODE IDENT | PL 79013D010 -1 | F REV

TITLE: PCB ASSY-LOGIC & MASTER BIAS SUPPLY

CAT NO: 83-4930-3639

FIND NO DESIG	MFG NAME	MFG PART NO	NOMENCLATURE OR DESCRIPTION	CAT NO	QTY
R24,R65,R93,R95, R97,R99,R105, R111,R170,,R172	OHMITE	LITTLE DEVIL	RES-FXD, COMP, 22K OHM, 1/4W, 5%	83-9520-2163	10
R29,R57,R151, R157	OHMITE	LITTLE DEVIL	RES-FXD, COMP, 3.9K OHM, 1/4W, 5%	9520-2096	4
R55,R87,R92,	OHMITE	LITTLE DEVIL	RES-FXD, COMP, 10 OHM, 1/4W, 5%	9520-2232	3
R56,R59,R61,R70, R119,R129,R138, R141,R146,R177	OHMITE	LITTLE DEVIL	RES-FXD, COMP, 10K OHM, 1/4W, 5%	9520-2112	10
R63	BECKMAN	89PR10K	RES-VAR, CER, 10K OHM, 3/4W, 20%	1520-1589	1
R64	OHMITE	LITTLE DEVIL	RES-FXD, COMP, 510K OHM, 1/4W, 5%	9520-2186	1
R66 R166,R167	MINCOM	0A781-7148	RES-FXD, FILM, 10K OHM, 1/2W, 2%	1520-7148	3
R67	OHMITE	LITTLE DEVIL	RES-FXD, COMP, 560 OHM, 1/4W, 5%	9520-2140	1
R69	OHMITE	LITTLE DEVIL	RES-FXD, COMP, 180 OHM, 1/4W, 5%	9520-2107	1
R74,R75,R142	BECKMAN	89PR100K	RES-VAR, CER, 100K OHM, 3/4W, 20%	1520-1576	3
R81,R91	MINCOM	0A781-7360	RES-FXD, FILM, 2.2K OHM, 1/2W, 2%	1520-7360	2
R85,R86	BECKMAN	89PR20K	RES-VAR, CER, 20K OHM, 3/4W, 20%	1520-1568	2
R96,R170	OHMITE	LITTLE DEVIL	RES-FXD, COMP, 47K OHM, 1/4W, 5%	9520-2090	2
R115	BECKMAN	89PR5K	RES-VAR, CER, 5K OHM, 3/4W, 20%	1520-1586	1
R117	OHMITE	LITTLE DEVIL	RES-CAR, 33 OHM, 1/4W, 5%	9520-2243	1
R127,R128,R132, R139	MINCOM	0A781-7217	RES-FXD, FILM, 1.5K OHM, 1/2W, 2%	1520-7217	4
R135,R140,R145, R152,R158,R110 R163	MINCOM	0A781-7175	RES-FXD, FILM, 1K OHM, 1/2W, 2%	1520-7175	7
R148	OHMITE	LITTLE DEVIL	RES-FXD, COMP, 15K OHM, 1/4W, 5%	9520-2120	1
R150,R159	MINCOM	0A781-7355	RES-FXD, FILM, 560 OHM, 1/2W, 2%	1520-7355	2
R155,R160	MINCOM	0A781-7221	RES-FXD, FILM, 100 OHM, 1/2W, 2%	1520-7221	2
R164,R165	MINCOM	0A781-7333	RES-FXD, FILM, 33 OHM, 1/2W, 2%	1520-7333	2
R169	MINCOM	0A781-7369	RES-FXD, FILM, 8.2K OHM, 1/2W, 2%	1520-7369	1
R174	MINCOM	0A781-7325	RES-FXD, FILM, 10 OHM, 1/2W, 2%	1520-7325	1
R76, R77, R78	OHMITE	RC07GF222J	RES-FXD, COMP, 2.2K OHM, 1/4W 5%	9520-2110	3
R100, R109	OHMITE	RC07GF392J	RES-FXD, COMP, 3.9K OHM, 1/4W, 5%	9520-2096	2
R143.	OHMITE	LITTLE DEVIL	RES-FXD, COMP, 12K OHM, 1/4W, 5%	9520-2159	1
R162	OHMITE	RC07GF103J	RES-FXD, COMP, 10K OHM, 1/4W, 5%	9520-2112	1

3M Mincom Division

PARTS LIST

12578 CODE IDENT

PL 79013D010-1

F REV

TITLE PCB ASSY-LOGIC & MASTER BIAS SUPPLY

CAT NO 83-4930- 3639

FIND NO.- DESIG	MFG NAME	MFG PART NO.	NOMENCLATURE OR DESCRIPTION	CAT. NO.	QTY
T1	NORTRONICS	T70-T5	XFMR-RF, BIAS OSC, 90-25 KHZ	83-1540-1371	1
1	MINCOM	79013D011	PC4750-LOGIC & MASTER BIAS SUPPLY	3640-2327	1
2	POTTER&BRUM	9KH2	SOCKET-RELAY, 14 PIN	1620-0184	4
3	AMP INC	583527-1	SOCKET-IC, 14 PIN DUAL INLINE	1620-0273	1
4	WAKEFIELD	NF-207	HEAT-SINK, DISSIPATOR, TO-5 CASE	1690-0318	2

Mincom Division 3M COMPANY
300 SOUTH LEWIS ROAD • CAMARILLO, CALIFORNIA 93010

PARTS LIST

12578 CODE IDENT	PL 79013D010-2 SHEET OF	D REV

TITLE: PCB ASSY — LOGIC & MASTER BIAS SUPPLY

CAT. NO. 83-4930-3640

FIND NO.- DESIG	MFG NAME	MFG PART NO.	NOMENCLATURE OR DESCRIPTION	CAT. NO.	QTY
C2,C9,C10	CENTRALABE	UK10-503	CAP-FXD, CER, .05 UF, 10 WVDC	83-1510-2307	3
C3,C4	COMP INC	CCM-035-105-10	CAP-FXD, TA, 1 UF, 35 WVDC, 10%	83-1510-6413	2
C5	COMP INC	CCZ-035-106-10	CAP-FXD, TA, 10 UF, 35 WVDC, 10%	83-1510-6422	1
C6,C11,C14	COMP INC	CCZ-025-336-10	CAP-FXD, TA, 33 UF, 25 WVDC, 10%	83-1510-6434	3
C8,C15,C17	SPRAGUE	109D107X0025F2	CAP-FXD, TA 100 UF, 25V, 20%	83-1510-6222	3
C12,C13	COMP INC	CCD-035-685-10	CAP-FXD, 6.8UF, 35 WVDC, 10%	83-1510-6420	2
C16		CSR13D157KL	CAP-FXD, TA, 150 UF, 15V, 10%	83-1510-6163	1
C21,C31	CENTRALAB	DDM-103	CAP-FXD, CER, .01UF, 150V, 40%	83-1510-1048	2
C22,C23	MINCOM	OA839-4584	CAP-FXD, MET P, .0047 UF, 200 V/S	83-1510-4584	2
C24	ARCO	TYPE 311	CAP-VAR, MICA, 780-2110 PF, 250V	83-1510-6274	1
C25	ARCO	DM19F512J	CAP-FXD, MICA, 5100 PF, 500V, 5%	83-1510-5279	1
C26	MINCOM	OA839-4499	CAP-FXD, PLSTC, .1UF, 200 VDC, 5%	83-1510-4499	1
C27	COMP INC	CCT-035-334-10	CAP-FXD, TA, .33UF, 35 WVDC, 10%	83-1510-6410	1
C28	COMP INC	CCH-010-227-10	CAP-FXD, TA, 220 UF, 10 WVDC, 10%	83-1510-6445	1
C29	COMP INC	CCT-035-474-10	CAP-FXD, TA, .47 UF, 35 WVDC, 10%	83-1510-6411	1
C30		CSR13F476KL	CAP-FXD, TA, 47 UF, 35V, 10%	83-1510-6146	1
C32,C33	CORNING	TD3-035-475-20	CAP-FXD, TA, 4.7 UF, 35V, 20%	83-1510-6210	2
CR1	MOTOROLA	2N5062	RECTIFIER, S1, CONT, PNP	83-1530-0529	1
CR2,CR3,CR4,CR5, CR6,CR7,CR8,CR11, CR12,CR13,CR14, CR15,CR16,CR17, CR18,CR19,CR20, CR22,CR28,CR29, CR30,CR31,CR32, CR35,CR36,CR37, CR38,CR39,CR40, CR41,CR43,CR44, CR45,CR46,CR47, CR48,CR49,CR50, CR50,CR51,CR52, CR53,CR54,CR55, CR56,CR57,CR58, CR59,CR60,	HUGHES	1N270	DIODE-GE, GEN PUR, 100 PIV, 60 MA	83-1530-0263	108

3M Mincom Division	PARTS LIST	12578 CODE IDENT	PL 79013D010 -2	D REV
	TITLE PCB ASSY -LOGIC & MASTER BIAS SUPPLY		CAT NO 83-4930-3640	

FIND NO - DESIG	MFG NAME	MFG PART NO	NOMENCLATURE OR DESCRIPTION	CAT NO	QTY
CR61,CR62,CR63, CR64,CR65,CR66, CR67,CR68,CR69, CR70,CR71,CR72, CR73,CR74,CR75, CR76,CR77,CR78, CR79,CR80,CR81, CR82,CR83,CR84, CR85,CR86,CR87, CR88,CR89,CR90, CR91,CR92,CR93, CR94,CR97,CR98, CR99,CR101,CR104, CR105,CR106, CR107,CR109, CR110,CR112, CR113,CR114, CR117,CR122, CR123,CR124, CR125,CR126, CR127,CR129, CR130,CR131,CR132 CR9,CR10, CR95,CR96,CR100, CR102,CR103,CR121	MOTOROLA	1N4004	RECT-SI, DIF JCT, 400 PIV, 1 AMP	83- 1530-0151	8

3M Mincom Division	PARTS LIST	12578 CODE IDENT	PL 79013D010-2	D REV
	TITLE PCB ASSY-LOGIC & MASTER BIAS SUPPLY		CAT NO 83-4930-3640	

FIND NO - DESIG	MFG NAME	MFG PART NO.	NOMENCLATURE OR DESCRIPTION	CAT NO	QTY
CR108,CR111	WESTINGHOUSE	1N1200AR	DIODE-SI, PWR, 100 PIV, 12 AMP	83-1530-0137	2
CR115	JEDEC	1N4740A	DIODE-SI, ZENER, 10 V, 1 W	1530-0389	1
CR116	MOTOROLA	1N4744A	DIODE-SI, ZENER, 15V, 1W, 5%	1530-0436	1
CR128,CR133 CR134	TEXAS INSTR	1N914	DIODE-SI, SWITCHING, 100 PIV	1530-0083	3
IC1	FAIRCHILD	U6A7741-393	INT CIR-OPERATIONAL AMP	1530-8136	1
,K2,K3,K4	POTTER&BRUM	KHP170D2-24	RELAY-4 PDT, 24 VDC, 650 OHM	1550-3678	3
L1	NYTRONICS	WEE-470	INDUCT-FXD, RF, 470 UH, 180 MA	1540-0543	1
L2	NYTRONICS	WEE-100	INDUCT-FXD, RF, 100UH, 345 MA	1540-0535	1
Q1,Q3,Q5,Q7,Q10 Q12,Q14,Q16,Q18, Q29,Q31,Q35,Q37, Q41,Q43	FAIRCHILD	2N3644	TSTR-SI, PNP, SWITCHING, 270 HFE	1530-2269	15
Q2,Q4,Q6,Q8,Q9, Q11,Q13,Q15,Q17, Q19,Q20,Q21,Q22, Q23,Q24,Q25,Q26, Q27,Q33,Q34,Q38, ,Q40,Q42,Q44, Q45,Q46,Q47,Q50	FAIRCHILD	2N3643	TSTR-SI, NPN, SWITCHING, 300 HFE	1530-2234	28
Q28,Q30,Q36,	RCA	2N3053	TSTR-SI, NPN, PWR, 60 VCB	1530-2180	3
Q32	RCA	2N3054	TSTR-SI, NPN, H PWR, 100 HFE	1530-2227	1
Q48,Q51	MOTOROLA	2N2219A	TSTR-SI, NPN, SW, 75VCB	1530-2154	2
Q49	MOTOROLA	MJ900	TSTR-SI, PNP, MISC, DARLINGTON	1530-2459	1

3M Mincom Division

PARTS LIST

12578 CODE IDENT | PL 79013D010-2 | D

TITLE: PCB ASSY-LOGIC & MASTER BIAS SUPPLY

CAT NO: 83-4930-3640

FIND NO DESIG	MFG NAME	MFG PART NO	NOMENCLATURE OR DESCRIPTION	CAT NO	QTY
R1,R6,R12,R32, R40,R43,R51,R154, R161	MINCOM	0A871-7346	RES-FXD, FILM, 200 OHM, 1/2W, 2%	83-1520-7346	9
R2,R5,R13,R16, R33,R39,R44,R50	OHMITE	LITTLE DEVIL	RES-FXD, COMP, 1.5K OHM, 1/4W, 5%	9520-2117	8
R3,R4,R7,R14,R15 R18,R23, R31, R34,R35,R38,R45, R46,R49,R60,R71, R72,R79,R82,R83, R88,R89,R101, R102,R106,R107, R113,R118,R120, R121,R122,R123, R124,R125	OHMITE	LITTLE DEVIL	RES-FXD, COMP, 4.7K OHM, 1/4W, 5%	9520-2111	34
R8,R9,R20,R21, R25,R28,R30,R36, R41,R47,R52	OHMITE	LITTLE DEVIL	RES-FXD, COMP, 2.7K OHM, 1/4W, 5%	9520-2098	11
R10,R37,R48, R103,R108,R149	OHMITE	LITTLE DEVIL	RES-FXD, COMP. 510 OHM, 1/4W, 5%	9520-2139	6
R11,R22,R27, R42,R53,R58, R68,R73,R80,R90, R94,R98,R104, R112,R114,R116, R126,R130,R131, R132,R134,R136, R137,R144,R147, R84	OHMITE	LITTLE DEVIL	RES-FXD, COMP, 1K OHM, 1/4W, 5%	9520-2088	26
R17,R153,R156	OHMITE	LITTLE DEVIL	RES-FXD, COMP, 200 OHM, 1/4W, 5%	9520-2132	3
R19	CORNING	RL20S511G	RES-FXD, FILM, 510 OHM, 1/2W, 2%	1520-7354	1
R54	OHMITE	LITTLE DEVIL	RES-FXD, COMP, 5.6K OHM, 1/4W, 5%	9520-2154	1

3M Mincom Division

PARTS LIST

12578 CODE IDENT | PL 79013D010 -2 | D REV

TITLE: PCB ASSY-LOGIC & MASTER BIAS SUPPLY

CAT NO: 83-4930-3640

FIND NO DESIG	MFG NAME	MFG PART NO	NOMENCLATURE OR DESCRIPTION	CAT NO	QTY
R24,R65,R93,R95, R97,R99,R105, R111,R172,R176	OHMITE	LITTLE DEVIL	RES-FXD, COMP, 22K OHM, 1/4W, 5%	83-9520-2163	10
R29,R57,R151, R157	OHMITE	LITTLE DEVIL	RES-FXD, COMP, 3.9K OHM, 1/4W, 5%	9520-2096	4
,R87,R92,	OHMITE	LITTLE DEVIL	RES-FXD, COMP, 10 OHM, 1/4W, 5%	9520-2232	2
R56,R59, ,R70, R119,R129,R138, R141,R146,R177	OHMITE	LITTLE DEVIL	RES-FXD, COMP, 10K OHM, 1/4W, 5%	9520-2112	9
R64	OHMITE	LITTLE DEVIL	RES-FXD, COMP, 510K OHM, 1/4W, 5%	9520-2186	1
R66,R166,R167	MINCOM	0A781-7148	RES-FXD, FILM, 10K OHM, 1/2W, 2%	1520-7148	3
R67	OHMITE	LITTLE DEVIL	RES-FXD, COMP, 560 OHM, 1/4W, 5%	9520-2140	1
R69	OHMITE	LITTLE DEVIL	RES-FXD, COMP, 180 OHM, 1/4W, 5%	9520-2107	1
R74,R75,R142	BECKMAN	89PR100K	RES-VAR, CER, 100K OHM, 3/4W, 20%	1520-1576	3
R81,R91	MINCOM	0A781-7360	RES-FXD, FILM, 2.2K OHM, 1/2W, 2%	1520-7360	2
R85,R86	BECKMAN	89PR20K	RES-VAR, CER, 20K OHM, 3/4W, 20%	1520-1568	2
R96,R170	OHMITE	LITTLE DEVIL	RES-FXD, COMP, 47K OHM, 1/4W, 5%	9520-2090	2
R115	BECKMAN	89PR5K	RES-VAR, CER, 5K OHM, 3/4W, 20%	1520-1586	1
R117	OHMITE	LITTLE DEVIL	RES-CAR, 33 OHM, 1/4W, 5%	9520-2243	1
R127,R128,R132, R139	MINCOM	0A781-7217	RES-FXD, FILM, 1.5K OHM, 1/2W, 2%	1520-7217	4
R135,R140,R145, R152,R158	MINCOM	0A781-7175	RES-FXD, FILM, 1K OHM, 1/2W, 2%	1520-7175	5
R143	OHMITE	LITTLE DEVIL	RES-FXD, COMP, 12K OHM, 1/4W, 5%	9520-2159	1
R148	OHMITE	LITTLE DEVIL	RES-FXD, COMP, 15K OHM, 1/4W, 5%	9520-2120	1
R150,R159	MINCOM	0A781-7355	RES-FXD, FILM, 560 OHM, 1/2W, 2%	1520-7355	2
R155,R160	MINCOM	0A781-7221	RES-FXD, FILM, 100 OHM, 1/2W, 2%	1520-7221	2
R164,R165	MINCOM	0A781-7333	RES-FXD, FILM, 33 OHM, 1/2W, 2%	1520-7333	2
R169	MINCOM	0A781-7369	RES-FXD, FILM, 8.2K OHM, 1/2W, 2%	1520-7369	1
R174	MINCOM	0A781-7325	RES-FXD, FILM, 10 OHM, 1/2W, 2%	1520-7325	1
R178	MINCOM	0A781-7147	RES-FXD, FILM, 4.7K OHM, 1/2W, 2%	1520-7147	1
R173,	OHMITE	LITTLE DEVIL	RES-FXD, COMP, 11K OHM, 1/4W, 5%	9520-2158	1
R171, R26	OHMITE	LITTLE DEVIL	RES-FXD, COMP, 120K OHM, 1/4W, 5%	9520-2175	2

3M Mincom Division

PARTS LIST

12578 CODE IDENT

PL 79013D010-2

D REV

TITLE PCB ASSY-LOGIC & MASTER BIAS SUPPLY

CAT NO 83-4930-3640

FIND NO DESIG	MFG NAME	MFG PART NO	NOMENCLATURE OR DESCRIPTION	CAT NO	QTY
R76, R77, R78	OHMITE	RC07GF222J	RES-FXD, COMP, 2.2K OHM, 1/4W, 5%	9520-2110	3
R100, R109	OHMITE	RC07GF392J	RES-FXD, COMP, 3 9K OHM, 1/4W, 5%	9520-2096	2
R110, R163	OHMITE	RC07GF822J	RES-FXD, COMP, 8.2K OHM, 1/4W, 5%	9520-2089	2
R162	OHMITE	RC07GF103J	RES-FXD, COMP, 10K OHM, 1/4W, 5%	9520-2112	1
T1	NORTRONICS	T70-T5	XFMR-RF, BIAS OSC, 90-25 KHZ	1540-1271	1
1	MINCOM	79013D011	PC4750-LOGIC & MASTER BIAS SUPPLY	3640-2327	1
2	POTTER&BRUM	9KH2	SOCKET-RELAY	1620-0184	3
3	AMP INC	583527-1	SOCKET-IC, 14 PIN DUAL INLINE	1620-0273	1
4	WAKEFIELD	NF-207	HEAT-SINK, DISSIPATOR, TO-5CASE	1690-0318	2

3M Mincom Division	PARTS LIST	12578 CODE IDENT	PL 79013A030	C REV
	TITLE MOTOR DRIVER ASSEMBLY		CAT. NO. 83-4930-3291	

FIND NO.	DESIG	MFG NAME	MFG PART NO.	NOMENCLATURE OR DESCRIPTION	CAT. NO	QTY
1		MINCOM	79013A031	PC BD DETAIL-MOTOR DRIVER PC 3992	83-3640-2122	1
2		MINCOM	79000B025	HEAT SINK-MOTOR DRIVER	3690-0430	1
	Q 1, Q9		2N 3405	TRANSISTOR SILICON NPN GEN PUR	1530-2232	2
	Q 2, Q8		2N 4918	TRANSISTOR SILICON PNP H1 PWR	1530-2382	2
	Q 3, Q 7		2N 3055	TRANSISTOR SILICON NPN PWR	1530-2157	2
	Q 4, Q6,		MJE2955	TRANSISTOR SILICON PNP H1 PWR 10A	1530-2424	2
	R 1, R 2	DALEOHM	RH-25	RESISTOR FXD WIRE WOUND 0.5Ω, 25W	1520-7604	2
	Q5,		MJE3055	TRANSISTOR-SI,NPN,HIGH PWR, 10 AMP	1530-2425	1

3M Mincom Division
MINNESOTA MINING AND MANUFACTURING CO.

PARTS LIST

12578 CODE IDENT

PL 79013A100

D REV

TITLE: TAPE TRANSPORT GROUP- 2 IN. DRIVE

CAT. NO. 83-5990-1325

FIND NO.- DESIG	MFG NAME	MFG PART NO.	NOMENCLATURE OR DESCRIPTION	CAT. NO.	QTY
1	MINCOM	56013B115-1	COVER-IDLER, MACHINING	83-3310-1578	1
2	MINCOM	56007A010	IDLER ASSY-REVERSING, 2 IN. TAPE	4240-0555	1
3	MINCOM	79007A030	CAPSTAN ASSY- 2 INCH TAPE	5920-1981	1
4	MINCOM	23013A040-3	ARM ASSY-TAPE LIFTER, 2 INCH	4210-0352	1
6	MINCOM	79007A005	MOTOR ASSY-TAKE UP REEL	4560-0324	1
7	MINCOM	79007A010	MOTOR ASSY-SUPPLY REEL	4560-0325	1
8	MINCOM	56007A031-1	ROLLER-IDLER, 2 IN INCOMING	3240-0559	1
9	MINCOM	56007A031-2	ROLLER-IDLER, 2 IN OUTGOING	3240-0560	1
10	MINCOM	56007A032	SHAFT-IDLER, ROLLER, 2 IN TAPE	3280-0767	2
11	PIC	83-5	SHIM-SPACER, .020 THK X .373 OD	1230-0077	2
12	PIC	D6-1	WASHER-SPG TENS, WAVY, BRG PRLDE	9262-0341	2
13	MINCOM	56007A027	WASHER-CUP	3261-4434	2
14	MINCOM	56007A028	COVER-SUPPORT	3310-1663	2
16	MINCOM	56007A029-1	SUPPORT-ROLLER	3340-0752	1
17	MINCOM	56007A029-2	SUPPORT-ROLLER	3340-0753	1
18	MIL STD	MS51973-9	SETSCREW-HEX SOC, 4-40 X 3/16 L	9261-0123	2
19	NYLOK	M39AS440R5C	SCREW-LKG, FH, 4-40 X 5/16	9260-0239	2
20	MINCOM	56013B115-2	COVER-IDLER, MACHINING	3310-1579	1

Mincom Division 3M COMPANY
300 SOUTH LEWIS ROAD • CAMARILLO CALIFORNIA 93010

PARTS LIST

12578	PL 79013A200	C
CODE IDENT	SHEET OF	REV

TITLE: TAPE TRANSPORT GROUP – 1/2 IN. DRIVE

CAT. NO.: 83-5990-1326

FIND NO.- DESIG	MFG NAME	MFG PART NO.	NOMENCLATURE OR DESCRIPTION	CAT. NO.	QTY
1	MINCOM	79000A011	ADAPTOR–REEL HUB BASE	83-3210-0472	2
2	MINCOM	23007A020	IDLER ASSY–REVERSING, 1/2 IN TAPE	4240-0388	1
3	MINCOM	79007A035	CAPSTAN ASSY–1/2 IN TAPE	5920-1982	1
4	MINCOM	23013A040-1	ARM ASSY–TAPE LIFTER, TRANSPORT	4210-0206	1
6	MINCOM	79007A025	MOTOR ASSY–TAKE UP REEL, NARROW TAPE	4560-0352	1
7	MINCOM	79007A020	MOTOR ASSY–SUPPLY REEL, NARROW TAPE	4560-0351	1
8	MINCOM	23007A040-1	ROLLER–IDLER, 1/2 IN INCOMING	4240-0310	1
9	MINCOM	23007A040-2	ROLLER–IDLER, 1/2 IN OUTGOING	4240-0311	1
10	MINCOM	23007B003-1	COVER–IDLER, SNAP ON	3310-1572	1
11	MINCOM	23007B003-2	COVER–IDLER, SNAP ON	3310-1573	1

Mincom Division 3M COMPANY
300 SOUTH LEWIS ROAD • CAMARILLO, CALIFORNIA 93010

PARTS LIST

12578 CODE IDENT | PL 79013A400 SHEET OF | K REV

TITLE: TAPE TRANSPORT GROUP - COMMON PARTS

CAT. NO. 83-5990-1328

FIND NO.- DESIG	MFG NAME	MFG PART NO.	NOMENCLATURE OR DESCRIPTION	CAT. NO.	QTY
	MINCOM	BD79000A720	BLOCK DIAGRAM-CONFIGURATION, M79	83-4700-0077	
A51	MINCOM	79013D010-2	PC BD ASSY-LOGIC & MASTER BIAS SUPPLY	83-4930-3640	1
A53	MINCOM	79013A030	MOTOR DRIVER ASSY	83-4930-3291	1
C2	SPRAGUE	36D253G040CD2A	CAP-FXD, ELECT, 25000UF, 40V	83-1510-2329	1
C3,C4	MIL STYLE	CS138F475K	CAP-FXD, TA 4.7 UF, 35V, 10%	83-1510-6095	2
CR1	WESTINGHOUSE	1N5403	RECT-S1, 3 AMPS, 300 V	83-1530-0460	1
CR2	GE	1N270	DIODE-GE, GEN PUR, 100 PIV, 60 MA	83-1530-0263	1
CR3,CR4	MOTOROLA	1N4004	DIODE, RECT-S1, DIF JCT, 400 PIV 1 AMP	83-1530-0151	2
DS1	GEN ELEC	1820	LAMP-INCANDESCENT, 28V, .10 A	83-1550-2602	1
DS2	AMP	1-380672-4	LIGHT ASSY-PILOT AMBER, 24 VOLTS	83-1550-2590	1
DS4,DS5,DS6,DS7, DS8,DS9	GEN ELEC	327	LAMP-INCANDESCENT, .04 AMP	83-1550-2506	6
E1	USECO	1480-C	TERMINAL-STUD, INSULATED TURRET	83-9630-0274	1
013J7	AMP	480323-0	SHELL-CONN, RECT, 15 POS	83-1610-0934	1
013J8	AMP	1-480304-0	SHELL-CONN, RECT, 3 POSITION	83-1610-1137	1
013J9	AMP	1-480275-0	SHELL-CONN, RECT, 12 POSITION	83-1610-0932	1
L2,L3	PHILLIPS CON	42C24DC-AX	SOLENOID-ELECTRICAL, PUSH/PULL	83-1550-4516	2
L4	PHILLIPS CON	42C24D0-AU	SOLENOID-ELECTRICAL, PUSH/PULL	83-1550-4513	1
L5,L6	LEDEX	128264-001	SOLENOID-ROTARY	83-1550-4514	2
013P1, 013P2	VIKING	2VK18D/1-2	CONN-PC, ELEC, PIERCD,36 CON	83-1610-0782	2
013P6	VIKING	2VK22D/1-2	CONN-T'C', ELEC, PIERCD, 22 CON	83-1610-0825	1
R1	GENERAL ELEC	A35	PHOTOELECTRIC CELL-LT ACTIVATE	83-1530-6020	1
R3	MINCOM	OA781-7350	RES-FXD, FILM, 330 OHM, 1/2W, 2%	83-1520-7350	1
R4,R5	OHMITE	0560	RES-ADJ, WW, 5 OHM, 50W, 10%	83-1520-8488	2
R6	OHMITE	0375	RES-ADJ, WW, 25 OHM, 25W, 10%	83-1520-8489	1
R7	OHMITE	LITTLE DEVIL	RES-FXD, COMP, 680 OHM, 1/4W, 5%	83-9520-2108	1
R2	VDAK	MODEL A-5	RES-VAR, WW 5 TURN, 2.5K OHMS, 2W	83-1520-1627	1
S1	C & K	7101	SW ROCKER, 1 POLE 3 POS	83-1550-6094	1

Mincom Division 3M COMPANY
300 SOUTH LEWIS ROAD • CAMARILLO CALIFORNIA 93010

PARTS LIST

12578 CODE IDENT | PL 79013A400 SHEET OF | K REV

TITLE: TAPE TRANSPORT GROUP-COMMON PARTS

CAT. NO. 83-5990-1328

FIND NO.- DESIG	MFG NAME	MFG PART NO.	NOMENCLATURE OR DESCRIPTION	CAT. NO.	QTY
S2	C & K	7411	SW-ROCKER, 4 POLE, 3 POS	83-1550-6093	1
S3	CENTRALAB	00000A852-2	SW-ROT, MODIFIED	83-1550-5225	1
S4	PENDAR	1118	SWITCH-PUSHBUTTON, SPDT	83-1550-5162	1
S5,S6,S7,S8,S9	PENDAR	S180-11	SWITCH-PUSHBUTTON, SPDT MOMENTARY	83-1550-5177	5
S10	C & K	2711	SW-ROCKER, 2 POLE 3 POS	83-1550-6091	1
S11	C & K	7401	SW-ROCKER, 4 POLE 2 POS	83-1550-6092	1
S12	MIL STD	MS24547-1	SW-BASIC, SPDT, 28 VDC 7 AMP	83-1550-5067	1
TB3,TB4	CINCH JONES	2010	TERM BD 3.500 BETWEEN MTG HOLES	83-1640-1611	2
TB5	CINCH JONES	52	TERM STRIP, LUG TYPE, 2 LUG	83-1640-1112	1
W5	ROYAL	K-5152	CORD ASSY-PWR, ELEC. 12 FT. LG.	83-1570-0001	1
XDS1	MINCOM	79013A401	LAMP HOLDER-MODIFIED, EOT SENSR	83-3620-0288	1
1	RUBBERCRAFT		SCREW-CAP, SOC HD, 6-32 X 5/16	83-9261-2130	4
2	RUBBERCRAFT		BUMPER-RUB, SLV, .125 ID X .3131	83-7230-0337	2
3	MIL STD	MS16633-1025	RING-RETAINING, TYPE E, 1/4 ID	83-7270-0413	2
4	STD PRSD STL	21-S-094-0437	PIN-SPRING, .094 DIA X .437 LG	83-7280-0223	3
5	MINCOM	56007A035-1	SHIM-IDLER, TAPE GUIDE	83-3230-0500	AR
6	MINCOM	56007A035-2	SHIM-IDLER, TAPE GUIDE	83-3230-0501	AR
7	MINCOM	56007A035-3	SHIM-IDLER, TAPE GUIDE	83-3230-0502	AR
8	MINCOM	56007A035-4	SHIM-IDLER, TAPE GUIDE	83-3230-0503	AR
9	MINCOM	56013A125	BRACKET-SOLENOID, TAPE LIFTER	83-3320-2156	1
10	MINCOM	19007A022	CAP-FLYWHEEL, PRECISION PLATE	83-3250-0082	1
11	MIL STD	MS35649-262	HUT-HEX, PLAIN, 6-32 X .313 WD	83-9260-2005	2
12	MINCOM	00000A741-3	LABEL-IDENT, PATENT, MOD 23	83-3550-1500	1
13	MINCOM	23013C036	SHAFT-MTG, TAPE LIFTER	83-3280-0890	1
14	KAYNAR	F12NTEC-524	NUT-SELF LKG, HEX. 5/16-24	83-9260-0186	3
15	MINCOM	23013A067	ARM-ACTUATOR, TAPE LIFTER	83-3210-0253	1
16	MINCOM	79013A022	BRACKET-MTG, SOLENOID, TPE TRANS	83-3320-2622	1
17	MINCOM	23013A011	BRACKET-MTG, SOLENOID, RH	83-3320-1108	1
18	MINCOM	56013B993	BRKT-AIR, DASHPOT, HEAD DOOR	83-3320-2783	1
19	MINCOM	23013A055	SPACER-COVER PLATE, TRANSPORT	83-3350-0414	2
20	MIL STD	TRUARC	RING-RETAINING, EXT, .225 ID	83-7270-0118	1
21	LONG LOK	LP22D82P6	SCREW-SELF LKG, PAN HD, 8-32 X 3/8	83-9262-0623	2

Mincom Division 3M COMPANY
300 SOUTH LEWIS ROAD • CAMARILLO, CALIFORNIA 93010

PARTS LIST

12578 CODE IDENT | PL 79013A400 SHEET OF | K REV

TITLE: TAPE TRANSPORT GROUP-COMMON PARTS

CAT. NO. 83-5990-1328

FIND NO.- DESIG	MFG NAME	MFG PART NO.	NOMENCLATURE OR DESCRIPTION	CAT. NO.	QTY
22	MIL STD	MS51017-26	SETSCREW-CUP PT, 6-32 X 1/2	83-9261-0051	2
23			SCREW-SOC. 8-32 X 1/4	83-9261-2057	4
24	MINCOM	23007A050-1	ARM ASSY-IDLER, ACTUATING, RH	83-4210-0232	2
25	MINCOM	56013A110-1	ARM ASSY-ROLLER	83-4210-0350	1
26	MINCOM	56013A110-2	ARM ASSY-ROLLER	83-4210-0351	1
27	MINCOM	23013A002	PLATE-TAPE DECK, TRANSPORT	83-3320-1027	1
28	MINCOM	79000A054	LENS-INDICATOR LIGHT, MUTE DEFEAT	83-3550-2295	1
29	MINCOM	79013A018	SHIELD-LIGHT, SENSOR	83-3550-8082	1
30	GROOV-PIN	GP67-125X500-12	PIN-GRVD, HDLS, .125 DIA X .500 LG	83-7280-0202	3
31			SCR-CAP, FH, 1/6 X 20 X 5/8, NYLOC	83-9262-0569	1
32	GROOV-PIN	GP4-125X0500-12	PIN-GRND, HDLS, .125 DIA X .500 LG	83-7280-0484	2
33	FAFNIR	AMF5DD-FS160	BRG-BALL, ANLR,	83-1230-0178	6
34	MINCOM	23013B035	SHAFT-ARM, IDLER	83-3280-0889	2
35	MINCOM	79013A023	LINK-SOLENOID, DOOR, RECORD HEAD	83-3210-0485	1
36		SEE DESC	BRG-BALL, S814FCZZ7LG31ZD-1-1	83-1230-0325	4
37	MINCOM	16049B015-1	LENS-IND LIGHT, *REWIND*	83-3550-1982	1
38	MINCOM	16049B015-2	LENS-IND LIGHT, *FORWARD*	83-3550-1983	1
39	MINCOM	23013A005	LENS-LAMP, TAPE SENSOR	83-3550-1406	2
40	MINCOM	23013B038	LENS-IND LIGHT, ENGRAVED *STOP*	83-3550-1981	1
41	MINCOM	16049B015-3	LENS-IND LIGHT *RECORD*	83-3550-1984	1
42	MINCOM	16049B015-4	LENS-IND LIGHT, *PLAY*	83-3550-1985	1
43	MIL STD		SCREW-MACH, FH, 80D, 6-32 X 7/8	83-9260-6523	2
45	MINCOM	56013A121	SPACER-CAPSTAN AREA, TRIM SPT	83-3350-0647	1
46	MINCOM	56013B124	SPACER-TRIM, CPSN AREA, FRONT	83-3350-0708	1
47	MINCOM	56007A050	BELT-DRIVE	83-3390-0047	1
48	MINCOM	56013B001	COVER-LAMP, DECORATIVE	83-3310-1583	1
49	MINCOM	56007A055	COVER-DUST, BELT DRIVE, TOP	83-3310-1437	1
50	MINCOM	79007A016	FLYWHEEL-CAPSTAN DRIVE	83-3220-0500	1
51	ELEC REG	303-85-15-1000	DASHPOT-AIR DAMPING CYLINDER	83-1270-0490	2
52	MINCOM	56007A035-1	SHIM-IDLER, TAPE GUIDE	83-3230-0500	AR
53	MINCOM	56013B122	COVER-TRIM, CAPSTAN AREA, RH	83-3310-1580	1
54	MINCOM	79013A019	COVER-TRIM, CAPSTAN AREA,LH	83-3310-1751	1
55	MINCOM	56007B056	COVER-DUST BELT DR, BOTTOM	83-3310-1649	1
56	MINCOM	79013B020	COVER-TRIM, HEAD	83-3310-1772	1

Mincom Division 3M COMPANY
300 SOUTH LEWIS ROAD • CAMARILLO CALIFORNIA 93010

PARTS LIST

12578 CODE IDENT	PL 79013A400 SHEET OF	K REV

TITLE: TAPE TRANSPORT GROUP-COMMON PARTS

CAT. NO. 83-5990-1329

FIND NO.- DESIG	MFG NAME	MFG PART NO.	NOMENCLATURE OR DESCRIPTION	CAT. NO.	QTY
57	MINCOM	79013A021	ARM-DOOR, RECORD	83-3210-0484	1
58	VIKING	091-0024-000	INSERT-POLARIZING, CONN, .300 LG	83-1610-0760	3
59	SPRAGUE	4586-2D	CLAMP-CAPACITOR, RING TYPE	83-1650-0224	1
60	TRUARC	5555-12	RING-RETNG, EXT, .120 ID	83-7270-0503	3
61			SCREW-CAP, SOC HD, 1/4-20 X 2.00	83-9261-2123	1
62	MIL STD	MS35338-44	WASHER-LOCK, SPLIT, HELICAL 1/4	83-9261-4309	1
63	BIRNBACH	6593	INSULATOR-WASH, NYLON, .016 TK	83-9630-0272	6
64	MINCOM	23013A095	ARM ASSY-ACTUATOR, DOOR HD CVR	83-4210-0237	1
65	NYLOCK		SCREW-MACH, FH, 100° (10-32 X 5/8)	83-9260-0029	1
66	MINCOM	23013A044	SPRING-RETURN, IDLER ARM, CAPSTN	83-3280-0422	3
67	MINCOM	00000A759	PLATE-NAME, UNIVERSAL	83-3330-0336	1
68	MINCOM	00000A627-10	LABEL-ID, M-23 PROFESSION REC	83-3550-1482	1
70	HARRY DAVIES	1914-N-SS	KNOB-CONT, RD, .250 SHAFT, INSERT	83-1270-0701	1
71	MICRO SW	JX-40	ACTUATOR-SWITCH, SPG LEAF TYPE	83-1550-5068	1
72	MINCOM	23007A007	BRACKET-SWITCH MTG, DOOR	83-3320-1158	1
73	MINCOM	79000C047	SUPPORT-TAPE TRANSPORT	83-3340-0867	1
76	AMP	60510-4	CONTACT-ELEC, SOC, 18-22 GA SIZE	83-1610-0927	25
77	THOM & BETTS	RAA-217	SPLICE-CONDUCTOR, BUTT TYPE	83-9630-0382	8
78	MINCOM	79000A018	BRACKET-SWITCH MOUNTING, SERVO	83-3320-2583	1
79	MINCOM	79000A043	BRACKET-SWITCH MOUNTING TAPE MOTION	83-3320-2621	1
80	THOM & BETTS	RA873	LUG-TERMINAL, SOLDERLESS, RING NO. 10	83-9630-0205	4
81	THOM & BETTS	RA853	LUG-TERM INSUL, RTG, 31 WD	83-9630-0206	4
82	MINCOM	00000A765-11	STRAP-GROUNDING, 12,000 LG	83-3650-0625	1
83	MIL STD	NAS1352-14-10P	SCREW-CAP, SOC HD, 4-40 X 5/8	83-9261-2004	4
84	MIL STD	MS16998-27	SCREW-CAP, SOC HD, 10-32 X 1/2	83-9261-2101	5
85	MIL STD	MS15017-21	SETSCREW-CUP POINT, 6-32 X 3/16	83-9261-0046	2
86	HH SMITH	775	CLAMP-CABLE, NYLON, .479 DIA	83-7650-0058	1
87	BIRNBACH	730	CLAMP-CABLE, NYLON, .4375	83-7650-0006	1
88	BIRNBACH	731	CLAMP-CABLE, NYLON, .542 DIA	83-7650-0007	1
89	THOM & BETTS	TY35M	CLAMP-LOOP, NYLON, TYRAP, 7.81 LG	83-7650-0056	2
90	AMP	60619-4	SOCKET-CONTACT, CONN, STR, 18-14	83-1610-1247	1
91		42566-1	CONT-ELECT, SOCKET CLIP, .220 WD	83-1610-0847	2
93	HARRY DAVIES	1914-2SS	KNOB-CONT, RND, UNSKD, .250 SHAFT	83-1270-0708	1
94	AMP	42566-1	CONT-ELECT, SOCKET CLIP, .220 WD	83-1610-0847	2
92	MINCOM	79000A120	PLATE-CONTROL, STRIPPER	83-3320-2789	1

3M Mincom Division

PARTS LIST | 12578 CODE IDENT | PL 79017A010 | C REV

TITLE: PCB ASSY-FUNCTION SWITCH | CAT. NO. 83-4930-3297

FIND NO - DESIG	MFG NAME	MFG PART NO.	NOMENCLATURE OR DESCRIPTION	CAT. NO.	QTY
CR1,CR2,CR3,CR4, CR5,CR6,CR7,CR8, CR9,	HUGHES	IN270	DIODE-GE, GEN PUR, 100 PIV, 60 MA	83-1530-0263	9
Q1,Q2	FAIRCHILD	2N3644	TSTR-SI, PNP, SWITCHING, 270 HFE	1530-2269	2
Q3,Q4	FAIRCHILD	2N3643	TSTR-SI, NPN, SWITCHING, 300 HFE	1530-2234	2
R1	OHMITE	LITTLE DEVIL	RES-FXD, COMP, 27K OHM, 1/4W, 5%	9520-2100	1
R2	OHMITE	LITTLE DEVIL	RES-FXD, COMP, 120 OHM, 1/4W, 5%	9520-2103	1
R4	OHMITE	LITTLE DEVIL	RES-FXD, COMP, 22K OHM, 1/4W, 5%	9520-2163	1
R3	OHMITE	LITTLE DEVIL	RES-FXD, COMP, 33K OHM, 1/4W, 5%	9520-2109	1
S1,S2,S3, S4	SHADOW	SEE DESC	SWITCH-4 UNIT, 4XFL 117.5FRB/BLK2UEE	1550-6096	1
1	MINCOM	79017A011	PCB DETAIL-FUNCTION SWITCH, PC3968	3640-2133	1

3M Mincom Division

PARTS LIST | 12578 CODE IDENT | PL 79017A013 | B REV

TITLE: PC BD ASSY-EXTENDER,MASTER REMOTE | CAT NO 83-4930-3322

FIND NO - DESIG	MFG NAME	MFG PART NO.	NOMENCLATURE OR DESCRIPTION	CAT NO	QTY
1	VIKING	2VH18/1AKC15	CONN. P.C. ELECT, DIP SOLDER 36 CON	83-1610-1725	1
2	MINCOM	79017A012	PC4058-EXTENDER, MASTER REMOTE	3640-2103	1

Mincom Division 3M COMPANY
300 SOUTH LEWIS ROAD • CAMARILLO, CALIFORNIA 93010

PARTS LIST

12578 CODE IDENT	PL 79017C015 SHEET OF	A REV

TITLE: PCB ASSY - MASTER REMOTE

CAT. NO.: 83-4930-3550

FIND NO.- DESIG	MFG NAME	MFG PART NO.	NOMENCLATURE OR DESCRIPTION	CAT. NO.	QTY
C1,C2	COMP INC	CCD-035-475-10	CAP-FXD, TA, 4.7UF, 35V, 10%	83-1510-6418	2
CR1,CR2,CR3,CR4, CR6,CR9,CR10,CR11, CR16	HUGHES	1N270	DIODE-GE, GEN PUR, 100 PIV, 60 MA	83-1530-0263	9
CR5,CR7,CR8	MOTOROLA	1N4004	RECT-S1, DIF JCT, 400 PIV, 1 AMP	83-1530-0151	5
CR12,CR15	WESTINGHOUSE	1N5403	RECT-S1, 3 AMPS, 300V	83-1530-0460	2
Q1,Q2,Q6,Q7,Q9,Q10	FAIRCHILD	2N3644	TSTR-S1, PNP, SWITCHING, 270 HFE	83-1530-2269	6
Q4	FAIRCHILD	2N3643	TSTR-S1, NPN, SWITCHING, 300 HFE	83-1530-2234	1
Q8	MOTOROLA	2N3053	TSTR-S1, NPN, POWER, 60 VCB	83-1530-2180	1
R1,R4	OHMITE	LITTLE DEVIL	RES-FXD, COMP, 22K OHM, 1/4W, 5%	83-9520-2163	2
R6	OHMITE	LITTLE DEVIL	RES-FXD, COMP, 2.7K OHM, 1/4W, 5%	83-9520-2098	1
R3,R5,R7,R10,R15,	OHMITE	LITTLE DEVIL	RES-FXD, COMP, 4.7K OHM, 1/4W, 5%	83-9520-2111	5
R8,R9,R12,R16, R20,R21	OHMITE	LITTLE DEVIL	RES-FXD, COMP, 10K OHM, 1/4W, 5%	83-9520-2112	6
R13	OHMITE	LITTLE DEVIL	RES-FXD, COMP, 15K OHM, 1/4W, 5%	83-9520-2120	1
R11	OHMITE	LITTLE DEVIL	RES-FXD, COMP, 1K OHM, 1/4W, 5%	83-9520-2088	1
R14,R17	OHMITE	LITTLE DEVIL	RES-FXD, COMP, 1K OHM, 1/4W, 5%	83-9520-2088	2
R18	OHMITE	LITTLE DEVIL	RES-FXD, COMP, 330 OHM, 1/4W, 5%	83-9520-2091	1
R19	OHMITE	LITTLE DEVIL	RES-FXD, COMP, 8.2K OHM, 1/4W, 5%	83-9520-2089	1
S1,S2,S3,S4	SHADOW	SEE DESC	SWITCH-4 UNIT, 4XFL117.5FRB/BLK2UEE	83-1550-6096	1
1	MINCOM	79017C016	PC4650-MASTER REMOTE	83-3640-2289	1
2	MINCOM	79017A001	LABEL-ID, MASTER REMOTE	83-3550-2135	1
4	MINCOM	79017A032	FILTER-LIGHT, INDICATOR LENS	83-3550-2296	2

Mincom Division 3M COMPANY
300 SOUTH LEWIS ROAD • CAMARILLO CALIFORNIA 93010

PARTS LIST

12578 CODE IDENT | PL 79017C030 SHEET OF | C REV

TITLE: MASTER CONTROL ASSEMBLY--REMOTE, TRANSPORT & SIG ELEC

CAT. NO. 83-4930-3549

FIND NO.- DESIG	MFG NAME	MFG PART NO.	NOMENCLATURE OR DESCRIPTION	CAT. NO.	QTY
1	MINCOM	79017B006	BRACKET–MTG, SWITCH	83-3320-2767	1
2	MINCOM	79017C015	PC BD ASSY MASTER REMOTE	4930-3550	1
S5,S6,S7,S8,S9	PENDAR	S180-11	SW–PUSH, SPDT, MOMENTARY	1550-5177	5
S10	C & K	7205	SWITCH–ROCKER, 2 POLE, 3 POS	1550-6095	1
3	MINCOM	23013B038	LENS–IND LIGHT, ENGRAVED * STOP *	3550-1981	1
4	MINCOM	16049B015-1	LENS–IND LIGHT, * REWIND *	3550-1982	1
5	MINCOM	16049B015-2	LENS–IND LIGHT, * FORWARD *	3550-1983	1
6	MINCOM	16049B015-3	LENS–IND LIGHT, * RECORD *	3550-1984	1
7	MINCOM	16049B015-4	LENS–IND LIGHT, * PLAY *	3550-1985	1
8	G. E.	327	LAMP–INCANDESCENT, .04 AMP	1550-2506	5
9	H.H. SMITH	2341	SPACER–RD No.4 SCREW X .375 LONG	9350-0227	2
10	PENDAR	CODE P SPECIAL	NUT–PLAIN, RD, 9/16–32 X 11/16	9262-0426	5
Q1,Q5	JEDEC	2N4918	TSTR-2N4918, SI, PNP, HI PWR	1530-2382	2

Mincom Division 3M COMPANY
300 SOUTH LEWIS ROAD • CAMARILLO, CALIFORNIA 93010

PARTS LIST

12578 CODE IDENT | PL 79017B040-1 SHEET OF | B REV

TITLE: CABLE ASSEMBLY-REMOTE, SIG ELECT

CAT. NO. 83-4570-0904

FIND NO.- DESIG	MFG NAME	MFG PART NO.	NOMENCLATURE OR DESCRIPTION	CAT. NO.	QTY
013P4	VIKING	2VK18S/1-2	CONN-P.C., ELEC, PIERCD, 18 CON	83-1610-0796	1
2	BELDEN	8459	CABLE-PWR, ELECT, 25 COND	83-7910-0729	AR
3	VIKING	091-0024-000	INSERT-POLARIZING, CONN,.300 LG	83-1610-0760	1
4	THOM & BETTS	TY-46M-0	CLAMP-ELEC, 7.25 LG WH PLSTC	83-7650-0055	2
7	THOM & BETTS	RB853	TERM-LUG, INSUL, R TG .31 WD	83-9630-0206	2
9	AMP	66088-3	CONTACT-PCB CONN, RT ANGLE	83-1610-1722	18
017P4	AMP	582378-9	SHELL-CONN, RT ANGLE, 18 CONT	83-1610-1723	1

Mincom Division 3M COMPANY
300 SOUTH LEWIS ROAD • CAMARILLO, CALIFORNIA 93010

PARTS LIST

12578 CODE IDENT | PL 79017B040-2 SHEET OF | B REV

TITLE: CABLE ASSEMBLY-REMOTE, SIG ELECT

CAT. NO. 83-4570-0905

FIND NO.- DESIG	MFG NAME	MFG PART NO.	NOMENCLATURE OR DESCRIPTION	CAT. NO.	QTY
013P4	VIKING	2VK18S/1-2	CONN-P.C., ELEC, PIERCD, 18 CON	83-1610-0796	1
2	BELDEN	8459	CABLE-PWR, ELECT, 25 COND	83-7910-0729	AR
3	VIKING	091-0024-000	INSERT-POLARIZING, CONN, .300 LG	83-1610-0760	1
4	THOM & BETTS	TY-46M-0	CLAMP-ELEC, 7.25 LG WH PLSTC	83-7650-0055	2
7	THOM & BETTS	RB853	TERM-LUG, INSUL, R TG .31 WD	83-9630-0206	2
9	AMP	66088-3	CONTACT-PCB CONN, RT ANGLE	83-1610-1722	18
017P4	AMP	582378-9	SHELL-CONN, RT ANGLE, 18 CONT	83-1610-1723	1

3M Mincom Division
MINNESOTA MINING AND MANUFACTURING CO.

PARTS LIST | 12578 CODE IDENT | PL 79017B045-1 | A REV

TITLE: CABLE ASSEMBLY-REMOTE, SIG ELEC 4'

CAT. NO. 83-4570-0888

FIND NO.- DESIG	MFG NAME	MFG PART NO.	NOMENCLATURE OR DESCRIPTION	CAT. NO.	QTY
1	VIKING	2VK22S/1-2	CONN-P.C.,ELEC, PIERCD, 22 CON	1610-0845	1
2	AMP	66088-3	CONTACT-PCB CONN, RT ANGLE	1610-1722	18
3	AMP	582378-9	SHELL-CONN, RT ANGLE, 18 CONT	1610-1723	1
4	BELDEN	8748-9	WIRE-TYPE 8748, 22GA, 18 CONDUC	7910-0534	AR
5	VIKING	091-0024-000	INSERT-POLARIZING, CONN, .300 LG	1610-0760	1
6	THOM&BETTS	TY-46M-0	CLAMP-ELECT, 7.25 LG, WH PLSTC	7650-0055	2

3M Mincom Division
MINNESOTA MINING AND MANUFACTURING CO.

PARTS LIST | 12578 CODE IDENT | PL 79017B045-2 | A REV

TITLE: CABLE ASSEMBLY-REMOTE, SIG ELEC, 30'

CAT. NO. 83-4570-0889

FIND NO.- DESIG	MFG NAME	MFG PART NO.	NOMENCLATURE OR DESCRIPTION	CAT. NO.	QTY
1	VIKING	2VK22S/1-2	CONN-P.C., ELEC, PIERCD, 22 CON	83-1610-0845	1
2	AMP	66088-3	CONTACT-PCB CONN, RT ANGLE	1610-1722	18
3	AMP	582378-9	SHELL-CONN, RT ANGLE, 18 CONT	1610-1723	1
4	BELDEN	8748-9	WIRE-TYPE 8748, 22GA, 18 CONDUC	7910-0534	AR
5	VIKING	091-0024-000	INSERT-POLARIZING, CONN, .300 LG	1610-0760	1
6	THOM&BETTS	TY-46M-0	CLAMP-ELECT, 7.25 LG, WH PLSTC	7650-0055	2

3M Mincom Division
MINNESOTA MINING AND MANUFACTURING CO

PARTS LIST	12578 CODE IDENT	PL 79017A100	G REV

TITLE MODE CONTROL ASSEMBLY - 8 CHANNEL

CAT. NO 83-5920-1912

FIND NO.- DESIG	MFG NAME	MFG PART NO.	NOMENCLATURE OR DESCRIPTION	CAT. NO.	QTY
1	MINCOM	79017A003	FRAME-MODE CONTROL, REMOTE	83-3340-0802	1
2	MINCOM	79017A004	HOUSING-MODE CONTROL REMOTE	3310-1758	1
3	MINCOM	79017B005-1	PLATE-STRIPPER, SWITCH	3320-2832	1
4	MINCOM	79017B007	SUPPORT-HOUSING, MODE CONTROL	3340-0841	2
5	MINCOM	79017A009	CLAMP-CABLE, REMOTE MODE CONTROL	3650-0688	2
6	MINCOM	79017A010	PC BD ASSY-FUNCTION SWITCH	4930-3297	8
9	MINCOM	79017A008	PANEL-SEPARATION, HOUSING	3360-2013	1
12	MINCOM	79017A019	BLOCK-RETAINER, REMOTE MODE CONTROL	3210-0506	1
11	MINCOM	79017D020-1	PCB ASSY-INTERCON REM M CONTROL	4930-3536	1
8	MINCOM	79017C030	MA CONT-RMT TSPT/SIG ELEC	4930-3549	1
13	MINCOM	79017B002-1	LABEL - IDENT, MODE CONTROL	3550-2303	4
14	MINCOM	79017B002-2	LABEL - IDENT, MODE CONTROL	3550-2304	4
15	MINCOM	79017B002-3	LABEL - IDENT, MODE CONTROL	3550-2305	4
16	MINCOM	79017B002-4	LABEL - IDENT, MODE CONTROL	3550-2307	4
17	MINCOM	79017B002-5	LABEL - IDENT, MODE CONTROL	3550-2308	4
18	MINCOM	79017B002-6	LABEL - IDENT, MODE CONTROL	3550-2309	4
19	MINCOM	79017B002-7	LABEL - IDENT, MODE CONTROL	3550-2310	4
20	MINCOM	79017B002-8	LABEL - IDENT, MODE CONTROL	3550-2311	4
21	AMATOM	8211-18-B-0440-3A	SPACER-HEX, THD 440 X 5/16 LG	1350-0876	4
22	MINCOM	79017A022	SCREW-SHOULDER, PLATE	3260-0328	4

3M Mincom Division
MINNESOTA MINING AND MANUFACTURING CO

PARTS LIST

12578 CODE IDENT | PL 79017A200 | G REV

TITLE MODE CONTROL ASSEMBLY-16 CHANNEL | CAT. NO. 83-5920-1895

FIND NO.- DESIG	MFG NAME	MFG PART NO.	NOMENCLATURE OR DESCRIPTION	CAT. NO.	QTY
1	MINCOM	79017A003	FRAME-MODE CONTROL, REMOTE	83-3340-0802	1
2	MINCOM	79017A004	HOUSING-MODE CONTROL REMOTE	3310-1758	1
3	MINCOM	79017B005-2	PLATE-STRIPPER, SWITCH	3320-2833	1
4	MINCOM	79017B007	SUPPORT-HOUSING, MODE CONTROL	3340-0841	2
5	MINCOM	79017A009	CLAMP-CABLE, REMOTE MODE CONTROL	3650-0688	3
6	MINCOM	79017A010	PC BD ASSY-FUNCTION SWITCH	4930-3297	16
9	MINCOM	79017A008	PANEL-SEPARATION, HOUSING	3360-2013	1
13	MINCOM	79017A019	BLOCK-RETAINER, REMOTE MODE CONTROL	3210-0506	1
12	MINCOM	79017D020-2	PCB ASSY-INTERCON REM M CONT	4930-3537	1
8	MINCOM	79017C030	MA CONT ASSY-RMT TSPT/SIG ELEC	4930-3549	1
14	MINCOM	79017B002-1	LABEL - IDENT, MODE CONTROL	3550-2303	4
15	MINCOM	79017B002-2	LABEL - IDENT, MODE CONTROL	3550-2304	4
16	MINCOM	79017B002-3	LABEL - IDENT, MODE CONTROL	3550-2305	4
17	MINCOM	79017B002-4	LABEL - IDENT, MODE CONTROL	3550-2307	4
18	MINCOM	79017B002-5	LABEL - IDENT, MODE CONTROL	3550-2308	4
19	MINCOM	79017B002-6	LABEL - IDENT, MODE CONTROL	3550-2309	4
20	MINCOM	79017B002-7	LABEL - IDENT, MODE CONTROL	3550-2310	4
21	MINCOM	79017B002-8	LABEL - IDENT, MODE CONTROL	3550-2311	4
22	MINCOM	79017B002-9	LABEL - IDENT, MODE CONTROL	3550-2312	4
23	MINCOM	79017B002-10	LABEL - IDENT, MODE CONTROL	3550-2313	4
24	MINCOM	79017B002-11	LABEL - IDENT, MODE CONTROL	3550-2314	4
25	MINCOM	79017B002-12	LABEL - IDENT, MODE CONTROL	3550-2315	4
26	MINCOM	79017B002-13	LABEL - IDENT, MODE CONTROL	3550-2316	4
27	MINCOM	79017B002-14	LABEL - IDENT, MODE CONTROL	3550-2317	4
28	MINCOM	79017B002-15	LABEL - IDENT, MODE CONTROL	3550-2318	4
29	MINCOM	79017B002-16	BLAEL - IDENT, MODE CONTROL	3550-2319	4
30	AMATOM	8211-18-B-0440-3A	SPACER-HEX, THD 440 X 5/16 LG	1350-0876	4
31	MINCOM	79017A022	SCREW-SHOULDER, PLATE	3260-0328	4

3M Mincom Division (Minnesota Mining and Manufacturing Co)	PARTS LIST	12578 CODE IDENT	PL 79017A300	G REV
	TITLE MODE CONTROL ASSEMBLY-24 CHANNEL		CAT. NO. 83-5920-1913	

FIND NO.- DESIG	MFG NAME	MFG PART NO.	NOMENCLATURE OR DESCRIPTION	CAT. NO.	QTY
				83-	
1	MINCOM	79017A003	FRAME-MODE CONTROL, REMOTE	3340-0802	1
2	MINCOM	79017A004	HOUSING-MODE CONTROL, REMOTE	3310-1758	1
3	MINCOM	79017B005-3	PLATE-STRIPPER, SWITCH	3320-2834	1
4	MINCOM	79017B007	SUPPORT-HOUSING, MODE CONTROL	3340-0841	2
5	MINCOM	79017A009	CLAMP-CABLE, REMOTE MODE CONTROL	3650-0688	4
6	MINCOM	79017A010	PC BD ASSY-FUNCTION SWITCH	4930-3297	24
9'	MINCOM	79017A008	PANEL-SEPARATION, HOUSING	3360-2013	1
13	MINCOM	79017A019	BLOCK-RETAINER, REMOTE MODE CONTROL	3210-0506	1
12	MINCOM	79017D020-3	PCB ASSY-INTERCON REM M CONT	4930-3538	1
8	MINCOM	79017C030	MA CONT ASSY-RMT TSPT/SIG ELEC	4930-3549	1
14	MINCOM	79017B002-1	LABEL - IDENT, MODE CONTROL	3550-2303	4
15	MINCOM	79017B002-2	LABEL - IDENT, MODE CONTROL	3550-2304	4
16	MINCOM	79017B002-3	LABEL - IDENT, MODE CONTROL	3550-2305	4
17	MINCOM	79017B002-4	LABEL - IDENT, MODE CONTROL	3550-2307	4
18	MINCOM	79017B002-5	LABEL - IDENT, MODE CONTROL	3550-2308	4
19	MINCOM	79017B002-6	LABEL - IDENT, MODE CONTROL	3550-2309	4
20	MINCOM	79017B002-7	LABEL - IDENT, MODE CONTROL	3550-2310	4
21	MINCOM	79017B002-8	LABEL - IDENT, MODE CONTROL	3550-2311	4
22	MINCOM	79017B002-9	LABEL - IDENT, MODE CONTROL	3550-2312	4
23	MINCOM	79017B002-10	LABEL - IDENT, MODE CONTROL	3550-2313	4
24	MINCOM	79017B002-11	LABEL - IDENT, MODE CONTROL	3550-2314	4
25	MINCOM	79017B002-12	LABEL - IDENT, MODE CONTROL	3550-2315	4
26	MINCOM	79017B002-13	LABEL - IDENT, MODE CONTROL	3550-2316	4
27	MINCOM	79017B002-14	LABEL - IDENT, MODE CONTROL	3550-2317	4
28	MINCOM	79017B002-15	LABEL - IDENT, MODE CONTROL	3550-2318	4
29	MINCOM	79017B002-16	LABEL - IDENT, MODE CONTROL	3550-2319	4
30	MINCOM	79017B002-17	LABEL - IDENT, MODE CONTROL	3550-2320	4
31	MINCOM	79017B002-18	LABEL - IDENT, MODE CONTROL	3550-2321	4

3M Mincom Division
MINNESOTA MINING AND MANUFACTURING CO.

PARTS LIST	12578 CODE IDENT	PL 79017A300	G REV

TITLE MODE CONTROL ASSEMBLY-24 CHANNEL

CAT. NO. 83-5920-1913

FIND NO.- DESIG	MFG NAME	MFG PART NO.	NOMENCLATURE OR DESCRIPTION	CAT. NO.	QTY
32	MINCOM	79017B002-19	LABEL-IDENT, MODE CONTROL	3550-2322	4
33	MINCOM	79017B002-20	LABEL-IDENT, MODE CONTROL	3550-2323	4
34	MINCOM	79017B002-21	LABEL-IDENT, MODE CONTROL	3550-2324	4
35	MINCOM	79017B002-22	LABEL-IDENT, MODE CONTROL	3550-2325	4
36	MINCOM	79017B002-23	LABEL-IDENT, MODE CONTROL	3550-2326	4
37	MINCOM	79017B002-24	LABEL-IDENT, MODE CONTROL	3550-2327	4
38	AMATOM	8211-18-B-0440-3A	SPACER-HEX, THD 440 X 5/16 LG	1350-0876	4
39	MINCOM	79017A022	SCREW-SHOULDER, PLATE	3260-0328	4

3M Mincom Division	PARTS LIST	12578 CODE IDENT	PL 79017A400	C REV
	TITLE REMOTE MODE CONTROL ASSY-TRANSPORT ONLY		CAT. NO. 83-5920-1939	

FIND NO - DESIG	MFG NAME	MFG PART NO.	NOMENCLATURE OR DESCRIPTION	CAT. NO.	QTY
CR1	HUGHES	1N270	DIODE-GE, GEN PUR, 100 PIV, 60 MA	83-1530-0263	1
DS1,DS2,DS3,DS4 DS5	GEN ELEC	327	LAMP-INCANDESCENT, .04 AMP	1550-2506	5
DS102	AMP	1-380672-4	LIGHT ASSY-PILOT, AMBER, 24V	1550-2590	1
013P4	VIKING	2VK18S/1/2	CONN-P.C. ELEC, PIERCED, 18 CON	1610-0796	1
R1	OHMITE	LITTLE DEVIL	RES-FXD, COMP, 1K OHM, 1W, 5%	9520-4151	1
S1,S2,S3,S4,S5	PENDAR	1018P	SWITCH-PUSHBUTTON, SPDT, MOMENT	1550-5177	5
S6	C&K	7205-J3 BLK	SW-ROCKER,2 POLE, 3 POS, MOM	1550-6095	1
1	MINCOM	79017A401	PANEL-SWITCH,MODE CONTROL	3360-2078	1
2	MINCOM	79017A402	HOUSING-MODE CONTROL	3310-1790	1
3	MINCOM	79017A403	CHASSIS-SW, MODE CONTROL	3310-1791	1
4	MINCOM	00000A662-1	LABEL-IDENTIFICATION,ASSY	3550-1276	1
5	T & B	TY35M	CLAMP-LOOP, NYLON TYRAP, 7.81 LG	7650-0056	1
6	BELDEN	8748	WIRE-TYPE 8748, 22 GA, 18 CONDUC	7910-0534	AR
7	RUBBERCRAFT	NO. 7	GROMMET-RUBBER, .375 ID X .687 OD	9630-0097	1
8	MINCOM	16049B015-1	LENS-IND LIGHT, "REWIND"	3550-1982	1
9	MINCOM	16049B015-2	LENS-IND LIGHT,"FORWARD"	3550-1983	1
10	MINCOM	16049B015-3	LENS-IND LIGHT, "RECORD"	3550-1984	1
11	MINCOM	16049B015-4	LENS-IND LIGHT, "PLAY"	3550-1985	1
12	MINCOM	23013B038	LENS-IND LIGHT, ENGRAVED "STOP"	3550-1981	1
13	H.H. SMITH	8404	SPACER-HEX, TAP 4-40 X .625 LG	1350-0811	2
14	VIKING	091-0024-000	INSERT-POLARIZING, CONN, .300 LG	1610-0760	1
15	AMP	42566-1	CONT-ELECT, SOCKET CLIP, .220 WD	1610-0847	2

PARTS LIST

PL 79028A014 REV

TITLE: LAMP ASSEMBLY-METER

CAT. NO. 83-4550-2681

FIND NO.- DESIG	MFG NAME	MFG PART NO.	NOMENCLATURE OR DESCRIPTION	CAT. NO.	QTY
1	MURA	L28/40	LAMP-PANEL ASSY, 28V, 40MA	83-1550-2603	1
2	CAMBION	3308-1	PLUG-TEST, UNINSL, CRIMP, .040 D	1610-1735	2

Mincom Division 3M COMPANY
300 SOUTH LEWIS ROAD • CAMARILLO, CALIFORNIA 93010

PARTS LIST

12578 CODE IDENT

PL 79028A600 SHEET OF H REV

TITLE: TRANSPORT MTG GROUP-CONSOLE

CAT. NO. 83-5990-1335

FIND NO.- DESIG	MFG NAME	MFG PART NO.	NOMENCLATURE OR DESCRIPTION	CAT. NO.	QTY
1	MINCOM	79028A001	CABINET-ENCLOSURE, CONSOLE, BLANK	83-3310-1717	1
2	MINCOM	37000A002	SUPPORT-ELECTRON BEAM GUN	83-3330-0388	2
3	MINCOM	79000A053	PIN-HEADLESS, ROUND	83-3280-1080	4
4		SCREW-WOOD	SCREW-WOOD, FH, SLOT, NO. 12 X 1.25 LG	83-9262-0617	8
5	CALIF HDW	NO. 10	COUNTER BALANCE-WDO SASH, DUAL	83-1240-0648	2
6	MINCOM	79000A036	ARM-TRANSPORT, TILT	83-3210-0483	2
7	MINCOM	79028A603	BRACKET-TRANSPORT LOCKING	83-3320-2681	1
8			SCREW-SHOULDER, SOC, HD, 5/16-18	83-9262-0608	2
9	MINCOM	79013A017-1	TRIM-SWITCH PANEL, LH	83-3330-0478	1
10	MINCOM	79013A017-2	TRIM-SWITCH PANEL, RH	83-3330-0479	1
11	MINCOM	79000A019	PLATE-SWITCH, STRIPPER	83-3320-2584	1
13			SCREW-WOOD, RH, NO. 4 X 1/2 LG	83-9260-0310	8
14	OILITE	PF-519-2	BEARING-SLEEVE, FLANGED, .378 ID	83-1230-0383	2
15		NU	NUT-PLAIN, HEX, 5/16 - 18	83-9260-2010	2
16	MINCOM	79000A039	BRACKET-MOUNTING, TERMINATIONS	83-3320-2620	1
17	MINCOM	23028A043	BRACKET-SUP. CABINET	83-3320-1420	1
18			SCREW-WOOD, RND HD, NO. 8 X 7/8	83-9262-0556	23

Mincom Division 3M COMPANY
300 SOUTH LEWIS ROAD • CAMARILLO, CALIFORNIA 93010

PARTS LIST

12578 CODE IDENT | PL 79028A600 SHEET OF | H REV

TITLE TRANSPORT MTG GROUP—CONSOLE

CAT. NO. 83-5990-1335

FIND NO.- DESIG	MFG NAME	MFG PART NO.	NOMENCLATURE OR DESCRIPTION	CAT. NO.	QTY
19	MINCOM	79000A046	BRACKET-ADAPTOR, TERMINATION	83-3320-2633	4
21			SCREW-SOC, 10-32 X 1-7/8	83-9261-2151	4
22		MS35333-41	WASHER-LOCK, FLAT, INT TOOTH 5/16	83-9261-4210	2
23			WASHER-FLAT, LIGHT SERIES 5/16	83-9261-4014	2
24	MINCOM	79000A013	SUPPORT-BEARING	83-3340-0784	2
25	MINCOM	79000A024-1	BRACKET-ADAPTOR, ELECTRONIC HOUSING	83-3320-2587	1
26	MINCOM	79000A023	SUPPORT-BAR, TAPE TRANSPORT	83-3340-0785	1
27	MINCOM	79000A024-2	BRACKET-ADAPTOR, ELECTRONIC HOUSING	83-3320-2632	1
28	MINCOM	79000A049	LABEL-ID, CONTROL LOCATIONS	83-3550-2145	1
29	MINCOM	23028A042	SUPPORT-CHANNEL, TRANSPORT	83-3340-0506	1
30	STD PRSD	21FK-1032	NUT-SELF-LOCKING, 10-32 X 3/8	83-9260-2408	1
31	STL		SCREW-WOOD, RH, + NO. 14 X 1 1/4 LG	83-9260-0227	2
32	MINCOM	18059A014	SPACER-PANEL, SIGNAL ELECT	83-3350-0314	2
33	MINCOM	79000A026	PANEL-SUPPORT, TRANSPORT	83-3360-1981	1
34	MINCOM	79000A037	BAR-TRIM, TRANSPORT	83-3340-0795	1
35			SCREW-CAP, HEX HD, 10-32 X 1/2	83-9260-0295	3
36	MINCOM	79028A601	PLATE-ADJUSTING, TRANSPORT TILT	83-3290-0368	2
37	MINCOM	79028A602	PLATE-WEAR, TRANSPORT TILT	83-3290-0369	2
38	MIL STD	MS16998-34	SCREW-SHC, 10-32 X 1-3/4	83-9261-2108	2
39	MIL STD	MS90728-5	SCREW-CAP, HEX HD, 1/4-20 X 5/8	83-9262-0461	1
40	MIL STD	MS27183-11	WASHER-FLAT, PLAIN 1/4	83-9261-4009	1
41	MINCOM	79028A604	SUPPORT-POWER SUPPLY	83-3340-0839	2
42	MINCOM	79028B605	COVER-ANTI PERSONNEL, PWR SUP	83-3310-1858	2
43	MIL STD	MS51973-29	SETSCREW-HDLS, CONE PT, 8-32 X 5/16	83-9261-0191	4

3M Mincom Division

PARTS LIST

12578 CODE IDENT

PL 79038B100

A REV

TITLE METER ASSY - 24 CH

CAT NO 83-4550-3211

FIND NO.- DESIG	MFG NAME	MFG PART NO	NOMENCLATURE OR DESCRIPTION	CAT. NO.	QTY
A1,A2,A3	MINCOM	79028C006	PC4338-METER CONNECTION	83-3640-2326	3
038P8,038P16, 038P24	VIKING	2VK22D/1-2	CONN-P.C., ELEC. PIERCD, 22 CON	1610-0825	3
DS1,DS2,DS3,DS4, DS5,DS6,DS7,DS8, DS9,DS10,DS11, DS12,DS13,DS14, DS15,DS16,DS17, DS18,DS19,DS20, DS21,DS22,DS23, DS24	CHICAGO MINATURE LAMP	CM 388	LAMP-INCAND, .04 AMP 28V	1550-2689	24
M1,M2,M3,M4,M5, M6,M7,M8,M9,M10, M11,M12,M13,M14, M15,M16,M17,M18, M19,M20,M21,M22, M23,M24	MINCOM	56038A101	METER-VU, 2-1/2 IN WD. BLK BEZEL	3550-3133	24
1	MINCOM	79000A028-1	SUPPORT-METER HOUSING, L SIDE	3340-0786	1
2	MINCOM	79000A028-2	SUPPORT-METER HOUSING, R SIDE	3340-0788	1
3	MINCOM	79028B003-2	HOUSING-METER	3310-1844	2
4	MINCOM	79028B003-1	HOUSING-METER	3310-1843	1
5	MINCOM	79028A004	FRAME-HOUSING, METER	3340-0787	3
6	MINCOM	79028A011-1	PANEL-METER, (DIXON)	3360-2007	3
7	MINCOM	79028A015	INSERT-DIFFUSING, METER LAMPS	3550-2338	3
8	MINCOM	79028A008-1	LABEL-IDENT, CHANNEL, METER	3550-2128	1
9	MINCOM	79028A008-2	LABEL-IDENT, CHANNEL, METER	3550-2129	1
10	VIKING	091-0024-000	INSERT-POLARIZING, CONN, .300LG	1610-0760	3
11	MINCOM	79028A008-3	LABEL-IDENT, CHANNEL, METER	3550-2130	1
12	LEECRAFT	25-277R	LAMPHOLDER-T3-1/4, W/MTG BRKT	1620-0294	24
13	3M	713	CLIP-CABLE, RING, .390-.500 OD	1270-0815	2
14	BELDEN	8748	WIRE-TYPE 8748, 22 GA, 18 CONDUC	7910-0534	AR

3M Mincom Division

PARTS LIST

12578 | PL 79038B200 | A REV

TITLE: METER ASSY-16 CH

CAT NO: 83-4550-3213

FIND NO - DESIG	MFG NAME	MFG PART NO	NOMENCLATURE OR DESCRIPTION	CAT NO	QTY
A1,A2	MINCOM	79028C006	PC4338-METER CONNECTION	83-3640-2326	2
C38P8,C38P16	VIKING	2VK22D/1-2	CONN-P.C., ELEC, PIERCD, 22 CON	1610-0825	2
DS1,DS2,DS3,DS4, DS5,DS6,DS7,DS8, DS9,DS10,DS11, DS12,DS13,DS14, DS15,DS16	CHICAGO MINATURE LAMP	CM 388	LAMP-INCAND, .04 AMP 28V	1550-2683	16
M1,M2,M3,M4,M5, M6,M7,M8,M9,M10, M11,M12,M13,M14, M15,M16	MINCOM	56038A101	METER-VU, 2-1/2 IN WD, BLK BEZEL	3550-3133	16
1	MINCOM	79000A028-1	SUPPORT-METER HOUSING, L SIDE	3340-0786	1
2	MINCOM	79000A028-2	SUPPORT-METER HOUSING, R SIDE	3340-0788	1
3	MINCOM	79028B003-2	HOUSING-METER	3310-1844	1
4	MINCOM	79028B003-1	HOUSING-METER	3310-1843	1
5	MINCOM	79028A004	FRAME-HOUSING, METER	3340-0787	2
6	MINCOM	79028A011-1	PANEL-METER, (DIXON)	3360-2007	2
7	MINCOM	79028A015	INSERT-DIFFUSING, METER LAMPS	3550-2338	2
8	MINCOM	79028A008-1	LABEL-IDENT, CHANNEL, METER	3550-2128	1
9	MINCOM	79028A008-2	LABEL-IDENT, CHANNEL, METER	3550-2129	1
10	VIKING	091-0024-000	INSERT-POLARIZING, CONN, .300 LG	1610-0760	2
11	LEECRAFT	25-277R	LAMPHOLDER-T3-1/4, W/MTG BRKT	1620-0294	16
12	3M	713	CLIP-CABLE, RING, .390-.500 OD	1270-0815	2
13	BELDEN	8748	WIRE-TYPE 8748, 22 GA, 18 CONDUC	7910-0534	AR

3M Mincom Division

PARTS LIST

12578 CODE IDENT

PL 79028B300

A REV

TITLE METER ASSY-8 CH

CAT. NO 83-4550-3215

FIND NO	DESIG	MFG NAME	MFG PART NO	NOMENCLATURE OR DESCRIPTION	CAT NO	QTY
A1		MINCOM	79028C006	PC4338-METER CONNECTION	83-3640-2326	1
	C38P8	VIKING	2VK22D/1-2	CONN-P.C., ELEC, PIERCD, 22 CON	1610-0825	1
DS1,DS2,DS3, DS4,DS5,DS6, DS7,DS8		CHICAGO MINATURE LAMP	CM 388	LAMP-INCAND, .04 AMP 28V	1550-2689	8
M1,M2,M3,M4,M5, M6,M7,M8		MINCOM	56038A101	METER-VU, 2-1/2 IN WD, BLK BEZEL	3550-3133	8
1		MINCOM	79000A028-1	SUPPORT-METER HOUSING, L SIDE	3340-0786	1
2		MINCOM	79000A028-2	SUPPORT-METER HOUSING, R SIDE	3340-0788	1
3		MINCOM	79028B003-1	HOUSING-METER	3310-1843	1
4		MINCOM	79028A004	FRAME-HOUSING, METER	3340-0787	1
5		MINCOM	79028A011-1	PANEL-METER, (DIXON)	3360-2007	1
6		MINCOM	79028A015	INSERT-DIFFUSING, METER LAMPS	3550-2338	1
7		MINCOM	79028A008-1	LABEL-IDENT, CHANNEL METER	3550-2128	1
8		LEECRAFT	25-277R	LAMPHOLDER-T3-1/4, W/MTG BRKT	1620-0294	8
9		VIKING	091-0024-000	INSERT-POLARIZING, CONN, .300 LG	1610-0760	1
10		3M	713	CLIP-CABLE, RING, .390-.500 OD	1270-0815	2
11		BELDEN	8748	WIRE-TYPE 8748, 22 GA, 18 CONDUC	7910-0534	AR

3M Mincom Division

PARTS LIST

12578 CODE IDENT

PL 79038A400

REV

TITLE METER ASSY- 4 CH

CAT. NO. 83-4550-3184

FIND NO - DESIG	MFG NAME	MFG PART NO	NOMENCLATURE OR DESCRIPTION	CAT NO	QTY
A1	MINCOM	79028B006	PC4460-METER CONNECTION	83-3640-2206	1
DS1,DS2,DS3,DS4	MINCOM	79028A014	LAMP ASSEMBLY-METER	4550-2681	4
M1,M2,M3,M4	MINCOM	56038A101	METER-VU, 2-1/2 IN WD, BLK BEZEL	3550-3133	4
J38P8	VIKING	2VK22D/1-2	CONN-P.C., ELEC. PIERCD, 22 CON	1610-0825	1
1	MINCOM	79000A028-1	SUPPORT-METER HOUSING	3340-0786	1
2	MINCOM	79000A028-2	SUPPORT-METER HOUSING	3340-0788	1
3	MINCOM	79028A003-1	HOUSING-METER	3310-1729	1
4	MINCOM	79028A004	FRAME-HOUSING METER	3340-0787	1
5	MINCOM	79028A011-2	PANEL-METER (DIXON), 4 CH	3360-2017	1
6	DIALCO	515-0051	RETAINER	1620-0243	4
7	MINCOM	79028A008-1	LABEL-IDENT, CHANNEL, METER	3550-2128	1
8	MINCOM	79028A009	FILTER-LIGHT, METER	3550-2131	1
9	MURA	RLC-W	LENS-CAP, IND LIGHT, WHITE	1550-1975	4
10	VIKING	091-0024-000	INSERT-POLARIZING, CONN, .300LG	1610-0760	1
11	3M	713	CLIP-RTNG, CABLE, 2.000 LG	1270-0815	2

3M Mincom Division

PARTS LIST

12578 CODE IDENT

PL 79038A500

REV

TITLE METER ASSY-2 CH

CAT NO. 83-4550-3185

FIND NO - DESIG	MFG NAME	MFG PART NO.	NOMENCLATURE OR DESCRIPTION	CAT NO	QTY
A1	MINCOM	79028B006	PC4460-METER CONNECTION	83-3640-2206	1
038P8	VIKING	2VK22D/1-2	CONN-P.C., ELEC. PIERCD, 22 CON	1610-0825	1
DS1,DS2	MINCOM	79028A014	LAMP ASSEMBLY-METER	4550-2681	2
M1,M2	MINCOM	56038A101	METER-VU, 2-1/2 IN WD. BLK BEZEL	3550-3133	2
1	MINCOM	79000A028-1	SUPPORT-METER HOUSING	3340-0786	1
2	MINCOM	79000A028-2	SUPPORT-METER HOUSING	3340-0788	1
3	MINCOM	79028A003-1	HOUSING-METER	3310-1729	1
4	MINCOM	79028A004	FRAME-HOUSING METER	3340-0787	1
5	MINCOM	79028A011-3	PANEL-METER (DIXON), 2 CH	3360-2018	1
6	DIALCO	515-0051	RETAINER	1620-0243	2
7	MINCOM	79028A008-1	LABEL-IDENT, CHANNEL, METER	3550-2128	1
8	MINCOM	79028A009	FILTER-LIGHT, METER	3550-2131	1
9	MURA	RLC-W	LENS-CAP, IND LIGHT, WHITE	1550-1975	2
10	VIKING	091-0024-000	INSERT-POLARIZING, CONN, .300 LG	1610-0760	1
11	3M	713	CLIP-RTNG, CABLE, 2.000 LG	1270-0815	2

3M Mincom Division

PARTS LIST

12578 CODE IDENT

PL 79038A600

REV

TITLE METER ASSY - 1 CH

CAT NO 83-4550-3186

FIND NO - DESIG	MFG NAME	MFG PART NO.	NOMENCLATURE OR DESCRIPTION	CAT. NO	QTY
				83-	
028P8	VIKING	2VK22D/1-2	CONN-P.C., ELEC. PIERCD, 22 CON	1610-0825	1
DS1	MURA	L28/40	LAMP	1550-2603	1
M1	MINCOM	56038A101	METER-VU, 2-1/2 IN WD, BLK BEZEL	3550-3133	1
1	MINCOM	79000A028-1	SUPPORT-METER HOUSING	3340-0786	1
2	MINCOM	79000A028-2	SUPPORT-METER HOUSING	3340-0788	1
3	MINCOM	79028A003-3	HOUSING-METER	3310-1761	1
4	MINCOM	79028A004	FRAME-HOUSING METER	3340-0787	1
5	MINCOM	79028A011-4	PANEL-METER (DIXON), 1 CH	3360-2019	1
6	DIALCO	515-0051	RETAINER	1620-0243	1
7	MINCOM	79028A008-1	LABEL-IDENT, CHANNEL, METER	3550-2128	1
8	MINCOM	79028A009	FILTER-LIGHT, METER	3550-2131	1
9	MURA	RLC-W	LENS-CAP, IND LIGHT, WHITE	1550-1975	1
10	VIKING	091-0024-000	INSERT-POLARIZING, CONN, .300 LG	1610-0760	1
11	3M	713	CLIP-RTNG, CABLE, 2.000 LG	1270-0815	2

Mincom Division 3M COMPANY

PARTS LIST

12578 CODE IDENT

PL 79038A660

REV

TITLE METER ASSY-8 CHANNEL, MODUTEC

CAT NO 83-4550-3229

FIND NO - DESIG	MFG NAME	MFG PART NO	NOMENCLATURE OR DESCRIPTION	CAT NO	QTY
A1	MINCOM	79028C006	PCB DETAIL-METER CONNECTION, PC4338	83-3640-2326	1
038P16	VIKING	2VK22D/1-2	CONN-P.C., ELEC, PIERCD, 22 CON	1610-0825	1
DS1,DS2,DS3, DS4,DS5,DS6, DS7,DS8	CHICAGO MINATURE LAMP	CM388	LAMP-INCAND, .04 AMP 28V	1550-2689	8
M1,M2,M3,M4, M5,M6,M7,M8	MINCOM	79028A016	METER-VU	3550-3228	8
1	MINCOM	79028A111-1	PANEL-METER, MODUTEC	3360-2079	1
2	MINCOM	79028B003-2	HOUSING-METER	3310-1844	1
3	MINCOM	79028A004	FRAME-HOUSING, METER	3340-0787	1
4	MINCOM	79028A015	INSERT-DIFFUSING, METER LAMPS	3550-2338	1
5	MINCOM	79028A008-2	LABEL-IDENT, CHANNEL, METER	3550-2129	1
6	VIKING	091-0024-000	INSERT-POLARIZING, CONN, .300 LG	1610-0760	* 1
7	LEECRAFT	25-277R	LAMPHOLDER-T3-1/4, W/MTG BRKT	1620-0294	8
8	3M	713	CLIP-CABLE, RING, .390-.500 OD	1270-0815	1
9	BELDEN	8748	WIRE-TYPE 8748, 22 GA, 18 CONDUC	7910-0534	AR

Mincom Division 3M	PARTS LIST	12578 CODE IDENT	PL 79038A670	A REV
	TITLE METER ASSY-8 CHAN, TOYO-MUSEN		CAT. NO 83-4550-3230	

FIND NO.- DESIG	MFG NAME	MFG PART NO	NOMENCLATURE OR DESCRIPTION	CAT NO.	QTY
A1	MINCOM	79028C006	PCB DETAIL-METER CONNECTION, PC4338	83-3640-2326	1
038P16	VIKING	2VK22D/1-2	CONN-P.C., ELEC, PIERCD, 22 CON	1610-0825	1
DS1,DS2,DS3,DS DS4,DS5,DS6, DS7,DS8	CHICAGO MINIATURE LAMP	CM388	LAMP-INCAND, .04 AMP 28V	1550-2689	8
M1,M2,M3,M4 M5,M6,M7,M8	MINCOM	79028A007	METER-VU	3550-3175	8
1	MINCOM	79028A005-1	PANEL-METER, FRONT	3360-1983	1
2	MINCOM	79028B003-2	HOUSING-METER	3310-1844	1
3	MINCOM	79028A004	FRAME-HOUSING, METER	3340-0787	1
4	MINCOM	79028A015	INSERT-DIFFUSING, METER LAMPS	3550-2338	1
5	MINCOM	79028A008-2	LABEL-IDENT, CHANNEL, METER	3550-2129	1
6	VIKING	091-0024-000	INSERT-POLARIZING, CONN, .300 LG	1610-0760	1
7	LEECRAFT	25-277R	LAMPHOLDER-T3-1/4, W/MTG BRKT	1620-0294	8
8	3M	713	CLIP-CABLE, RING, .390-.500 OD	1270-0815	1
9	BELDEN	8748	WIRE-TYPE 8748, 22 GA, 18 CONDUC	7910-0534	AR

Mincom Division 3M COMPANY

PARTS LIST

12578 CODE IDENT

PL 79038A680

REV

TITLE: METER ASSY-8 CHANNEL, DIXON

CAT NO: 83-4550-3231

FIND NO - DESIG	MFG NAME	MFG PART NO	NOMENCLATURE OR DESCRIPTION	CAT NO	QTY
A1	MINCOM	79028C006	PCB DETAIL-METER CONNECTION, PC4338	83-3640-2326	1
038P16	VIKING	2VK22D/1-2	CONN-P.C., ELEC, PIERCD, 22 CON	1610-0825	1
DS1,DS2,DS3, DS4,DS5,DS6, DS7,DS8	CHICAGO MINATURE LAMP	CM388	LAMP-INCAND, .04 AMP 28V	1550-2689	8
M1,M2,M3,M4, M5,M6,M7,M8	MINCOM	56038A101	METER-VU, 2 1/2 IN WD, BLK, BEZEL	3550-3133	8
1	MINCOM	79028B003-2	HOUSING-METER	3310-1844	1
2	MINCOM	79028A004	FRAME-HOUSING, METER	3340-0787	1
3	MINCOM	79028A011-1	PANEL-METER, (DIXON)	3360-2007	1
4	MINCOM	79028A015	INSERT-DIFFUSING, METER LAMPS	3550-2338	1
5	MINCOM	79028A008-2	LABEL-IDENT, CHANNEL, METER	3550-2129	1
6	VIKING	091-0024-000	INSERT-POLARIZING, CONN, .300 LG	1610-0760	1
7	LEECRAFT	25-277R	LAMPHOLDER-T3-1/4, W/MTG BRKT	1620-0294	8
8	3M	713	CLIP-CABLE, RING, .390-.500 OD	1270-0815	1
9	BELDEN	8748	WIRE-TYPE 8748, 22 GA, 18 CONDUC	7910-0534	AR

3M Mincom Division

PARTS LIST

12578 CODE IDENT

PL 79057A100

G REV

TITLE PCB ASSY-TERM, 8TK, W/INP XFMR

CAT NO. 83-4930-3334

FIND NO - DESIG	MFG NAME	MFG PART NO.	NOMENCLATURE OR DESCRIPTION	CAT NO.	QTY
A1	MINCOM	79000D045	PC 4690 - TERMINATION, SIG ELEC	83-3640-2304	1
J5,J6,J7,J8,J9, J10,J11, J12	SWITCHCRAFT	D3M	CONN-RECP, ELEC, PNL MTG, 3 PIN	1610-1106	8
J13,J14,J15,J16, J17,J18,J19,J20	SWITCHCRAFT	D3F	CONN-RECP, ELEC, PNL MTG, 3 SOC	1610-1105	8
P1,P2,P3	MOLEX	1360R-1	CONN-RECPT, W/O TABS/EARS, 12C	1610-1719	3
R1,R2,R3,R4,R5, R6,R7,R8	MINCOM	0A781-7362	RES-FXD, FILM, 3.6K OHM, 1/2W,2%	1520-7362	8
R9,R10,R11,R12, R13,R14,R15,R16	OHMITE	LITTLE DEVIL	RESISTOR-CAR, 620 OHM, 1W, 5%	9520-4146	8
S1,S2,S3,S4,S5, S6,S7,S8	STACKPOLE	SS-50-1-PC	SWITCH-SLIDE	1550-5624	8
T1,T2,T3,T4,T5, T6,T7,T8		79059A007	XFMR-AUDIO, OUTPUT, SPDT, 125V AC	3540-1372	8
T9,T10,T11,T12, T13,T14,T15,T16		79059A008	XFMR-AUDIO, INPUT	3540-1373	8
1	MOLEX	1377TL	SOC-CONTACT, PC TAIL SYTLE	1610-1720	33
2	MOLEX	1376TL	PIN-CONTACT, PC TAIL STYLE	1610-1721	3
3	MINCOM	79000A030	BRACKET-MTG, INPUT CONN	3320-2591	1
4	MINCOM	79000A031	BRACKET-MTG, OUTPUT CONN	3320-2592	1
5			SCREW-MACH, FH, 4-40 X 5/16	9260-6503	32
6	H.H. SMITH	8349	SPACER-SLV, RD, TAP , 1.500 LG	9350-0520	4
7	H.H. SMITH	2515	INSULATOR-WASHER, PLAIN, NYLON	9630-0268	3

3M Mincom Division

PARTS LIST

12578 CODE IDENT

PL 79057A140

F REV

TITLE: PCB ASSY-TERM, 8 TK, W/O INP XFMR

CAT NO: 83-4930-3338

FIND NO DESIG	MFG NAME	MFG PART NO	NOMENCLATURE OR DESCRIPTION	CAT NO	QTY
A1	MINCOM	79000D045	PC 4600 - TERMINATION, SIG ELEC	83-3640-2304	1
J5,J6,J7,J8,J9, J10,J11,J12	SWITCHCRAFT	D3M	CONN-RECP, ELEC, PNL MTG, 3 PIN	1610-1106	8
J13,J14,J15,J16 J17,J18,J19,J20	SWITCHCRAFT	D3F	CONN-RECP, ELEC, PNL MTG, 3 SOC	1610-1105	8
P1,P2,P3	MOLEX	1360R-1	CONN-RECPT, W/O TABS/EARS, 12C	1610-1719	3
R1,R2,R3,R4,R5, R6,R7,R8	MINCOM	0A781-7362	RES-FXD, FILM, 3.6K OHM, 1/2W, 2%	1520-7362	8
R9,R10,R11,R12, R13,R14,R15,R16	OHMITE	LITTLE DEVIL	RESISTOR-CAR, 620 OHM, 1W, 5%	9520-4146	8
S1,S2,S3,S4,S5, S6,S7,S8	STACKPOLE	SS-50-1-PC	SWITCH-SLIDE	1550-5624	8
T1,T2,T3,T4,T5, T6,T7,T8		79058A007	XFMR-AUDIO, OUTPUT, SPDT, 125V AC	3540-1372	8
1	MOLEX	1377TL	SOC-CONTACT, PC TAIL STYLE	1610-1720	33
2	MOLEX	1376TL	PIN-CONTACT, PC TAIL STYLE	1610-1721	3
3	MINCOM	79000A030	BRACKET-MTG, INPUT CONN	3320-2591	1
4	MINCOM	79000A031	BRACKET-MTG, OUTPUT CONN	3320-2592	1
5			SCREW-MACH, FH, 4-40 X 5/16	9260-6503	32
6	H.H. SMITH	8349	SPACER-SLV, RD, TAP, 1.500 LG	9350-0520	4
7	H.H. SMITH	2515	INSULATOR-WASHER, PLAIN, NYLON, #6	9630-0268	3

Mincom Division 3M COMPANY	PARTS LIST	12578 CODE IDENT	PL 79057A180	B REV
	TITLE PCB ASSY-TERM, 2TK REPRO		CAT. NO. 83-4930-3679	

FIND NO	DESIG	MFG NAME	MFG PART NO.	NOMENCLATURE OR DESCRIPTION	CAT NO.	QTY
	A1	MINCOM	79000D045	PC4690 TERMINATION, SIG ELEC	83-3640-2304	1
	J5,J6	SWITCHCRAFT	D3M	CONN-RECP, ELEC, PNL MTG, 3 PIN	1610-1106	2
	P1,P2,P3	MOLEX	1360R-1	CONN-RECPT, W/O TABS/EARS, 12C	1610-1719	3
	R1,R2	MINCOM	OA781-7362	RES-FXD, FILM, 3.6K OHM, 1/2W, 2%	1520-7362	2
	R9,R10	OHMITE	LITTLE DEVIL	RESISTOR-CAR, 620 OHM, 1W, 5%	9520-4146	2
	S1,S2	STACKPOLE	SS-50-1-PC	SWITCH-SLIDE SPDT, 125V AC	1550-5624	2
	T1,T2		79059A007	XFMR-AUDIO, OUTPUT,	3540-1372	2
	1	MOLEX	1377TL	SOC-CONTACT, PC TAIL STYLE	1610-1720	33
	2	MOLEX	1376TL	PIN-CONTACT, PC TAIL STYLE	1610-1721	3
	3	MINCOM	79000A031	BRACKET-MTG, OUTPUT CONN	3320-2592	1
	4			SCREW-MACH, FH, 4-40 X 5/16	9260-6503	4
	5	H.H. SMITH	8349	SPACER-SLV, RD, TAP, 1.500 LG	9350-0520	4

Mincom Division 3M COMPANY
300 SOUTH LEWIS ROAD • CAMARILLO, CALIFORNIA 93010

PARTS LIST

12578 CODE IDENT

PL 79059F010 SHEET OF

A REV

TITLE PCB ASSY SIGNAL ELECTRONICS

CAT. NO. 83-4930-3707

FIND NO.- DESIG	MFG NAME	MFG PART NO.	NOMENCLATURE OR DESCRIPTION	CAT. NO.	QTY
C1,C3	CENTRALAB	UK 10-503	CAP–FXD, TA, 1.5 UF, 35 WVDC	83-1510-6414	2
C2,C6,C7,C15,C18,C20	COMP INC	CCT-035-154-10	CAP–FXD, TA, .15 UF, 35 WVDC, 10%	1510-6408	6
C4,C17,C29,C31	COMP INC	CCD-035-475-10	CAP- FXD, TA, 4.7 UF, 35 WVDC, 10%	1510-6418	4
C5,C25,C28	MINCOM	0A839-4584	CAP–FXD, MET P, .0047 UF, 200V, 10%	1510-4584	3
C8	COMP INC	CCL-035-335-10	CAP–FXD, TA, 3.3 UF, 35 WVDC, 10%	1510-6416	1
C9	MALLORY	TT501N02501J1P	CAP- FXD, AL, 500 UF, 25V	1510-2328	1
C10,C38,C43	MIL STYLE	CSR13E416KM	CAP–FXD, TA, 47 UF, 20 WVDC, 10%	1510-6060	3
C13	MINCOM	0A836-5149	CAP–FXD, MICA, 3600 PF, 500V, 5%	1510-5149	1
C14	ARCO	311	CAP–VAR, MICA, 780-2110 PF, 250V	1510-6274	1
C16	MINCOM	0A839-6028	CAP FXD, MYLAR, .047 UF, 200V, 5%	1510-6028	1
C19,C21	ARCO	464	CAP- VAR, MICA, 25-280 PF	1510-6277	2
C22	COMP INC	CCD-020-126-10	CAP–FXD, TA, 12 UF, 20V, 10%	1510-6423	1
C23	MINCOM	0A839-6016	CAP–FXD, MYLAR, .0015 UF, 200V, 5%	1510-6016	1
C27,C53	COMP INC	CCM-035-105-10	CAP–FXD, TA, 1 UF, 35 WVDC, 10%	1510-6413	2
C26, C33	COMP INC	CCD-035-475-10	CAP–FXD, TA, 4.7 UF, 35 WVDC, 10%	1510-6418	2
C34,C36,C44,C49,C52	COMP INC	CCD-015-226-10	CAP FXD, TA, 22 UF, 15 WVDC, 10%	1510-6429	5
C35	COMP INC	CCL-035-225-10	CAP–FXD, TA, 2.2 UF, 35 WVDC, 10%	1510-6415	1
C37	MINCOM	0A836-5096	CAP–FXD, MICA, 270 PF, 500V, 5%	1510-5096	1
C39,C40,C41,C42	MINCOM	0A839-6023	CAP–FXD, MYLAR, .012 UF, 200V, 5%	1510-6023	4
C24	COMP INC	CCZ-020-476-10	CAP FXD, TA, 47 UF, 20 WVDC, 10%	1510-6438	1
C45,C46,C47,C48	MINCOM	0A839-6020	CAP–FXD, MYLAR, .0039 UF, 200V, 5%	1510-6020	4
C50	COMP INC	CCT-035-104-10	CAP- FXD, TA, .1 UF, 35V, 10%	1510-6407	1
C51	MINCOM	0A839-4109	CAP- FXD, PLSTC, .0068 UF, 200V	1510-4109	1
C30	MIL STYLE	CSR130226KL	CAP–FXD, TA, 22 UF, 15V, 10%	1510-6113	1
C55	MINCOM	0A836-5109	CAP–FXD, MICA, 3000 PF, 500V, 5%	1510-5109	1
C11	MINCOM	0A836-5043	CAP–FXD, MICA, 2700 PF, 500V, 5%	1510-5043	1
C12	MINCOM	0A836-5103	CAP- FXD, MICA, 330 PF, 500V, 5%	1510-5103	1
C56	MINCOM	0A839-4459	CAP–FXD, 22 UF, 200 VDC, 5%	1510-4459	1
C57,C58	MINCOM	0A836-5164	CAP–FXD, MICA, 150 PF, 500V, 10%	1510-5164	2
CR1,CR4,CR6,CR5, CR7,CR8,CR12,CR15	HUGHES	1N270	DIODE–GE, GEN PUR, 100 PIV, 60 MA	1530-0263	8
CR3	MOTOROLA	1N4004	RECT–SI, DIF JCT, 400 PIV, 1 AMP	1530-0151	1
CR9,CR11,CR13,CR14, CR18,CR19	TEXAS INSTR	1N914	DIODE–SI, SWITCHING, 100 PIV	1530-0083	6
CR10	FAIRCHILD	FD6666	DIODE–SI, PLANAR, 50 WIC, 200 MA	1530-0223	1
CR16	GE	STB 567	DIODE–SI, STABISTOR, 1.46 FWD V	1530-0542	1

Mincom Division 3M Company
300 SOUTH LEWIS ROAD • CAMARILLO CALIFORNIA 93010

PARTS LIST

12578 CODE IDENT	PL 79059F010 SHEET OF	A REV

TITLE: PCB ASSY–SIGNAL ELECTRONICS

CAT. NO.: 83-4930-3707

FIND NO.- DESIG	MFG NAME	MFG PART NO.	NOMENCLATURE OR DESCRIPTION	CAT. NO.	QTY
E5,E6,E18,E19,E21	MICRODOT	202-3948	CABLE–SHLDED, TWST, PR 28 GA, BLK	83-7910-0528	AR
E14,E15	BIRNBACH	1434	WIRE–BUSS, 22 GA, ROUND	7910-0105	AR
IC1,IC2	MOTOROLA	MC672P	INT CIR–QUAD, 2 INPUT NAND GATE	1530-8179	2
IC3,IC4	FAIRCHILD	U6A7741393	INT CIR–OPERATIONAL AMP	1530-8136	2
IC5	RCA	CA3146	INT CIR–LINEAR, NPN TSTR ARRAY	1530-8198	1
K1	ELEC-TROL	RA3021-1241	RELAY–REED, SPST, 24 VDC	1550-3748	1
L1,L2,L4	NYTRONICS	WEE-100	INDUCT–FXD, RF, 100 UH, 345 MA	1540-0535	3
L3	NYTRONICS	WEE-V-L 100	INDUCT–ADJ, RF, VERT, 100 UH	1540-0609	1
L5,L6,L7,L8	NYTRONICS	WEE-27000	INDUCT–FXD, RF, 27 MH, 35 MA	1540-0648	4
Q6,Q9,Q21,Q32,Q33,Q36	MOTOROLA	2N3903	TSTR–SI, NPN, SWITCHING, 50 HFE	1530-2282	6
Q8,Q12,Q14,Q15	RCA	2N2270	TSTR–SI, NPN, PLANAR, SMALL-SIG	1530-2059	4
Q10,Q11,Q18,Q19,Q20, Q25,Q26,Q27,Q28,Q34, Q35	MOTOROLA	2N4342	TSTR–SI, P-CHANNEL, FET	1530-2462	11
Q13	JEDEC	2N4036	TSTR–SI, PNP, SW, 20 HFE	1530-2300	1
Q16,Q17	MOTOROLA	2N3766	TSTR–SI, NPN, PWR, 60 VCE	1530-2224	2
Q22,Q7	MOTOROLA	2N3905	TSTR–SI, PNP, SW, 50 HFE	1530-2281	2
Q24,Q29,Q30,Q31	SPRAGUE	2N4384	TSTR–SI, NPN, SW, 40 VCB	1530-2156	4
Q23	MOTOROLA	2N3993	TSTR–SI, P-CHANNEL, JUNCTION FET	1530-2481	1
R6	OHMITE	LITTLE DEVIL	RES–FXD, COMP, 11K OHM, 1/4W, 5%	9520-2158	1
R1,R7,R9,R10,R11,R12, R122	OHMITE	LITTLE DEVIL	RES–FXD, COMP, 33K OHM, 1/4W, 5%	9520-2109	7
R3,R4	CORNING	RL20S332G	RES–FXD, FILM, 3.3K OHM, 1/2W, 5%	1520-7149	2
R2,R48,R50	OHMITE	LITTLE DEVIL	RES–FXD, COMP, 27K OHM, 1/4W, 5%	9520-2100	3
R5	MIL-R-11D/8	RC07GF112J	RES–FXD, COMP, 1.1K OHM, 1/4W, 5%	9520-2144	1
R16,R28	OHMITE	LITTLE DEVIL	RES–CAR, 3.3K OHM, 1/4W, 5%	9520-2095	2
R15,R132,R133	OHMITE	LITTLE DEVIL	RES–FXD, COMP, 1K OHM, 1/4W, 5%	9520-2088	3
R13,R71	OHMITE	LITTLE DEVIL	RES–FXD, COMP, 68K OHM, 1/4W, 5%	9520-2118	2
R14,R25,R51	OHMITE	LITTLE DEVIL	RES–FXD, COMP, 22K OHM, 1/4W, 5%	9520-2163	3
R17	OHMITE	LITTLE DEVIL	RES–FXD, COMP, 56 OHM, 1/4W, 5%	9520-2101	1
R18,R22,R23,R24,R43, R46,R52,R68,R75,R76, R77,R78,R88,R124, R89,R90,R91	OHMITE	LITTLE DEVIL	RES–FXD, COMP, 100K OHM, 1/4W, 5%	9520-2119	17

Mincom Division 3M COMPANY
300 SOUTH LEWIS ROAD • CAMARILLO CALIFORNIA 93010

PARTS LIST

12578 CODE IDENT | PL 79059F010 SHEET OF | A REV

TITLE: PCB ASSY SIGNAL ELECTRONICS

CAT. NO. 83-4930-3707

FIND NO.- DESIG	MFG NAME	MFG PART NO.	NOMENCLATURE OR DESCRIPTION	CAT. NO.	QTY
R19,R44,R47,R56,R117, R119,R120,R131	OHMITE	LITTLE DEVIL	RES–FXD, COMP, 10K OHM, 1/4W, 5%	83-9520-2112	8
R20,R21	OHMITE	LITTLE DEVIL	RES–FXD, COMP, 240K OHM, 1/4W, 5%	9520-2181	2
R26	OHMITE	LITTLE DEVIL	RES–FXD, COMP, 24K OHM, 1/4W, 5%	9520-2164	1
R27,R97,R99	OHMITE	LITTLE DEVIL	RES–FXD, COMP, 1.8K OHM, 1/4W, 5%	9520-2147	3
R29,R30	OHMITE	LITTLE DEVIL	RES–FXD, COMP, 6.8OHM, 1/4W, 5%	9520-2245	2
R31	OHMITE	LITTLE DEVIL	RES–CARB, 6.8K OHM, 1/4W, 5%	9520-2097	1
R32	VACTEC	VTL1A3	PHOTOELECTRIC CELL–12V, 25 MA	1530-6037	1
R33	OHMITE	LITTLE DEVIL	RES–FXD, COMP, 22 OHM, 1/4W, 5%	9520-2241	1
R34,R35,R36,R37	OHMITE	LITTLE DEVIL	RES–CARB, 47 OHM, 1/4W, 5%	9520-2125	4
R38	MINCOM SPEC	0A731-7350	RES–FXD, FILM, 330 OHM, 1/2W, 2%	1520-7350	1
R39,R40,R60,R61	OHMITE	LITTLE DEVIL	RES–CARB, 27 OHM, 1/4W, 5%	9520-2236	4
R41	BECKMAN	89PR200	RES–VAR, CER, 200 OHM, 3/4W, 20%	1520-1572	1
R42	OHMITE	LITTLE DEVIL	RES–FXD, COMP, 10 OHM, 1/4W, 5%	9520-2232	1
R45	OHMITE	LITTLE DEVIL	RES–FXD, COMP, 8.2K OHM, 1/4W, 5%	9520-2089	1
R49,R62,R111,R118, R121	BECKMAN	89PR5K	RES–VAR, CER, 5K OHM, 3/4W, 20%	1520-1586	5
R70,R79	CORNING	RL07S121G	RES–FXD, FILM, 120 OHM, 1/4W, 2%	1520-0354	2
R84,R86	CORNING	RL07S224G	RES–FXD, FILM, 220K OHM, 1/4W, 2%	1520-7301	2
R53,R73,R126	OHMITE	LITTLE DEVIL	RES–FXD, COMP, 220K OHM, 1/4W, 5%	9520-2121	3
R85,R94	CORNING	RL07S682G	RES–FXD, FILM, 6.8K OHM, 1/4W, 2%	1520-7309	2
R54,R55,R128,R129	OHMITE	LITTLE DEVIL	RES–FXD, COMP, 1M OHM, 1/4W, 5%	9520-2123	4
R66,R80	CORNING	RL20S105G	RES–FXD, FILM, 1M OHM, 1/2W, 2%	1520-0146	2
R57	OHMITE	LITTLE DEVIL	RES–FXD, COMP, 180K OHM, 1/4W, 5%	9520-2179	1
R58,R59,R8	OHMITE	LITTLE DEVIL	RES–FXD, COMP, 5.6K OHM, 1/4W, 5%	9520-2154	3
R134	OHMITE	LITTLE DEVIL	RES–FXD, COMP, 470 OHM, 1/4W, 5%	9520-2116	1
R65,R74	CORNING	RL07S274G	RES–FXD, FILM, 270K OHM, 1/4W, 2%	1520-0391	2
R67	OHMITE	LITTLE DEVIL	RES–FXD, COMP, 680 OHM, 1/4W, 5%	9520-2108	1
R69,R125	OHMITE	LITTLE DEVIL	RES–FXD, COMP, 12K OHM, 1/4W, 5%	9520-2159	2
R64	OHMITE	LITTLE DEVIL	RES–FXD, COMP, 120 OHM, 1/4W, 5%	9520-2103	1
R72	OHMITE	LITTLE DEVIL	RES–FXD, COMP, 15K OHM, 1/4W, 5%	9520-2120	1
R81,R83	CORNING	RL07S2742F	RES–FXD, FILM, 27.4K OHM, 1/4W, 1%	1520-0225	2
R82,R123	MINCOM	0A812-0177	RES–FXD, FILM, 221 OHM, 1/4W, 1%	1520-0177	2
R87,R93	CORNING	RL07S391G	RES–FXD, FILM, 390 OHM, 1/4W, 2%	1520 7200	2
R102,R103,R104,R112	BECKMAN	89 PRIM	RES–VAR, CER, 1M OHM, 3/4W, 20%	1520-1567	4

Mincom Division 3M COMPANY 300 SOUTH LEWIS ROAD • CAMARILLO CALIFORNIA 93010	PARTS LIST	12578 CODE IDENT	PL SHEET	79059F010 OF	A REV
	TITLE PCB ASSY—SIGNAL ELECTRONICS			CAT. NO. 83-4930-370⁷	

FIND NO.- DESIG	MFG NAME	MFG PART NO.	NOMENCLATURE OR DESCRIPTION	CAT. NO.	QTY
R106,R107,R108,R109	BECKMAN	89PR50K	RES—VAR, CER, 50K OHM, 3/4W, 20%	83-1520-1588	4
R113,R114,R115,R116	BECKMAN	89PR10K	RES—VAR, CER, 10K OHM, 3/4W, 20%	1520-1589	4
R98,R100	OHMITE	LITTLE DEVIL	RES—FXD, COMP, 560 OHM, 1/4W, 5%	9520-2140	2
R130	OHMITE	LITTLE DEVIL	RES—FXD, COMP, 150 OHM, 1/4W, 5%	9520-2105	1
R135	CORNING	RL07S111G	RES—FXD, FILM, 110 OHM, 1/4W, 2%	1520-0353	1
R136	CORNING	RL07S753G	RES—FXD, FILM, 75K OHM, 1/4W, 2%	1520-0377	1
R137	OHMITE	LITTLE DEVIL	RES—FXD, COMP, 2K OHM, 1/4W, 5%	9520-2148	1
R138	OHMITE	LITTLE DEVIL	RES—CAR, 30K OHM, 1/4W, 5%	9520 2165	1
R92,R96	CORNING	RL07S333G	RES—FXD, FILM, 33K OHM, 1/4W, 2%	1520-7311	2
R95,R101	CORNING	RL07S681G	RES—FXD, FILM, 680 OHM, 1/4W, 2%	1520 7230	2
R105,R110	CORNING	RL07S182G	RES—FXD, FILM, 1.8K OHM, 1/4W, 2%	1520-7241	2
T1	MINCOM	00000A719	XFMR—TORROIDAL, ARNOLD CORE	3540-1151	1
T2,T4	MINCOM	00000A720	XFMR—TORROIDAL, ARNOLD CORE	3540-1152	2
T3	BEYER XFMR	TR145BV35845	XFMR—AUDIO FREQ, 15KHZ, 80 OHM	1540-1284	1
TP1	AMP INC	2-582118-0	JACK—TEST, .156 WD X .230 HT, BLK	1610-0764	1
TP2	AMP INC	2-582118-9	JACK—TEST, .156 WD X .230 HT, WHT	1610-0763	1
VR1	JEDEC	1N962B	DIODE—SI, ZENER, 11V, 5%	1530 0420	1
VR2,VR3	TEXAS INSTR	1N746A	DIODE—SI, ZENER, 3.3V, 20 MA, .4W	1530-0107	2
1	MINCOM	79059A011	PC 4944 - SIGNAL ELECTRONICS	3640-2387	1
2	WAKEFIELD	NF-207	HEATSINK—DISSIPATOR, TO-5 CASE	1690-0318	5
3	AMP INC	583527-1	SOCKET IC, 14 PIN DUAL IN-LINE	1620-0273	5
4	LERCO	501-000-D	PAD—TSTR, 5 LEAD, .346 DIA	9690-0001	3
5	SCANBE	S202	HANDLE—EJECTOR, LEVER ACTION	1270-0409	2
6	ESNA	79-022-094-0250	PIN—SPRING, .094 DIA X .250 LG	7280-0270	2
7	MINCOM	23059A016	BRACKET, COMP MTG, SIGNAL ELEX	3320-1132	2
8	MILTON ROSS	A-10042-DAP	PAD TSTR, .250 DIA X .080 DP	9690-0104	4
9	MICRODOT	202-3942	CABLE—SHLDED, TWST PR 28 GA BLK	7910-0528	AR
10		79059A014	BRACKET—SUPPORT	3320-2791	1
11	MILTON ROSS	10245-N	PAD—MOUNTING, TSTR, 4 LEAD	1690-0448	1

NOTE:
1 INSTALL TSTR PADS, ITEM NO. 8 FOR Q24, Q29, Q30, AND Q31

Mincom Division 3M Company
100 SOUTH LEWIS ROAD · CAMARILLO CALIFORNIA 93010

PARTS LIST

12578 CODE IDENT | PL 79059B020 | A REV

TITLE: PCB ASSY-SIGNAL ELECTRONICS, REPRO ONLY

CAT. NO. 83-4930-3708

FIND NO.- DESIG	MFG NAME	MFG PART NO.	NOMENCLATURE OR DESCRIPTION	CAT. NO.	QTY
C8	COMP INC	CCL-035-335-10	CAP-FXD, TA, 3.3 UF, 35 WVDC, 10%	83-1510-6416	1
C9	MALLORY	TT501N02501J1P	CAP-FXD, AL, 500 UF, 25 VDC	1510-2328	1
C10,C43	COMP INC	CCZ-020-476	CAP-FXD, TA, 47 UF, 20 WVDC, 10%	1510-6060	2
C31,C33	COMP INC COMP INC	CCD-035-475-10	CAP-FXD, TA, 4.7 UF, 35 WVDC, 10%	1510-6418	2
C36,C49	COMP INC	CCD-015-226-10	CAP-FXD, TA, 22 UF, 15 WVDC, 10%	1510-6429	2
C37	MINCOM	OA836-5096	CAP-FXD, MICA, 270 PF, 500V, 5%	1510-5096	1
C41,C42	MINCOM	OA839-6023	CAP-FXD, MYLAR, .012 UF, 200V, 5%	1510-6023	2
C47,48	MINCOM	OA839-6020	CAP-FXD, MYLAR, .0039 UF, 200 V, 5%	1510-6020	2
C58	MINCOM	OA836-5164	CAP-FXD, MICA, 150PF, 500V, 5%	1510-5164	1
CR5	HUGHES	IN270	DIODE-GE, GEN PUR, 100 PIV, 60 MA	1530-0263	1
CR10	FAIRCHILD	FD6666	DIODE-SI, PLANAR, 50 WIC, 200 MA	1530-0223	1
CR11,CR19	TEXAS INSTR	IN914	DIODE-SI, SWITCHING, 100 PIV	1530-0083	2
E5,E6,E18,E19, E21	MICRODOT	202-3948	CABLE-SHLDED, TWST, PR 28 GA, BLK	7910-0528	AR
E14,E15	BIRNBACH	1434	WIRE-BUSS, 22 GA, ROUND	7910-0105	AR
IC1,	MOTOROLA	MC672P	INT CIR-QUAD, 2 INPUT NAND GATE	1530-8179	2
IC4	FAIRCHILD	U6A7741393	INT CIR-OPERATIONAL AMP	1530-8136	1
L7,L8	NYTRONICS	WEE-27000	INDUCT-FXD, RF, 27 MH, 35 MA	1540-0648	2

Mincom Division 3M COMPANY

PARTS LIST

12578 CODE IDENT

PL 79059B020

A REV

TITLE PCB ASSY-SIGNAL ELECTRONICS, REPRO ONLY

CAT NO 83-4930-3708

FIND NO.- DESIG	MFG NAME	MFG PART NO	NOMENCLATURE OR DESCRIPTION	CAT NO.	QTY
				83-	
Q12	RCA	2N2270	TSTR-S1, NPN, SWITCHING, 50 HFE	1530-2059	1
Q13	JEDEC	2N4036	TSTR-S1, PNP, SW, 20 HFE	1530-2300	1
Q27,Q28,Q35	MOTOROLA	2N4342	TSTR-S1,P-CHANNEL, FET	1530-2462	3
Q29,Q31	SPRAGUE	2N4384	TSTR-S1, NPN, SW, 40 VCB	1530-2156	2
Q32	MOTOROLA	2N3903	TSTR-S1, NPN SW 50 HFE	1530-2282	1
R77,R78,R90, R91	OHMITE	LITTLE DEVIL	RES-FXD, COMP, 100K OHM, 1/4W, 5%	9520-2119	4
R25	OHMITE	LITTLE DEVIL	RES-FXD, COMP, 22K OHM, 1/4W, 5%	9520-2163	1
R26	OHMITE	LITTLE DEVIL	RES-FXD, COMP, 24K OHM, 1/4W, 5%	9520-2164	1
R27,R99	OHMITE	LITTLE DEVIL	RES-FXD, COMP, 1.8K OHM, 1/4W, 5%	9520-2147	2
R28	OHMITE	LITTLE DEVIL	RES-CAR, 3.3K OHM, 1/4W, 5%	9520-2095	1
R29,R30	OHMITE	LITTLE DEVIL	RES-FXD, COMP, 6.8 OHM, 1/4W, 5%	9520-2245	2
R31	OHMITE	LITTLE DEVIL	RES-CARB, 6.8K OHM, 1/4W, 5%	9520-2097	1
R72	OHMITE	LITTLE DEVIL	RES-FXD, COMP, 15K OHM, 1/4W, 5%	9520-2120	1
R74	CORNING	RL07S274G	RES-FXD, FILM, 270K OHM, 1/4W, 2%	1520-0391	1
R79	CORNING	RL07S121G	RES-FXD, FILM, 120 OHM, 1/4W, 2%	1520-0354	1
R80	CORNING	RL20S105G	RES-FXD, FILM, 1M OHM,1/2W, 2%	1520-0146	1
R83	CORNING	RL07S2742F	RES-FXD, FILM, 27.4K OHM, 1/4W, 1%	1520-0225	1
R84	CORNING	RL07S224G	RES-FXD, FILM, 220K OHM, 1/4W, 2%	1520-7301	1
R122	OHMITE	LITTLE DEVIL	RES-FXD,COMP, 33K OHM, 1/4W, 5%	9520-2109	1
R93	CORNING	RL07S391G	RES-FXD,FILM , 390 OHM, 1/4W, 2%	1520-7200	1
R95	CORNING	RL07S681G	RES-FXD,FILM , 680 OHM, 1/4W, 2%	1520-7230	1
R100	OHMITE	LITTLE DEVIL	RES-FXD, COMP,560 OHM, 1/4W, 5%	9520-2140	1
R103,R104	BECKMAN	89 PRIM	RES-VAR, CER, 1M OHM, 3/4W, 20%	1520-1567	2
R108,R109	BECKMAN	89PR50K	RES-VAR, CER, 50K OHM, 3/4W, 20%	1520-1588	2
R115,R116	BECKMAN	89 PRIOK	RES-VAR, CER, 10K OHM, 3/4W, 20%	1520-1589	2
R118	BECKMAN	89PR5K	RES-VAR, CER, 5K OHM, 3/4W, 20%	1520-1586	1
R119,R24	OHMITE	LITTLE DEVIL	RES-FXD, COMP, 10K OHM, 1/4W 5%	9520-2112	2
R123	MINCOM	OA812-0177	RES-FXD, FILM, 221 OHM, 1/4W, 1%	1520-0177	1
R134	OHMITE	LITTLE DEVIL	RES-FXD, COMP, 470 OHM, 1/4W, 5%	9520-211[illegible]	1
R92	CORNING	RL07S333G	RES-FXD, FILM, 33K OHM, 1/4W, 2%	1520-7311	1
R94	CORNING	RL07S682G	RES-FXD, FILM, 6.8K OHM, 1/4W, 2%	1520-7309	1
R95	CORNING	RL07S182G	RES-FXD, FILM, 1.8KOHM, 1/4W, 2%	1520-7241	1

Mincom Division 3M COMPANY

PARTS LIST

12578 CODE IDENT

PL 79059B020

A REV

TITLE PCB ASSY-SIGNAL ELECTRONICS, REPRO ONLY

CAT NO 83-4930-3708

FIND NO.- DESIG	MFG NAME	MFG PART NO.	NOMENCLATURE OR DESCRIPTION	CAT NO.	QTY
				83-	
1	MINCOM	79059E011	PC4640 - SIGNAL ELECTRONICS	3640-2282	1
2	WAKEFIELD	NF-207	HEATSINK-DISSIPATOR, TO-5 CASE	1690-0318	2
3	AMP INC	583527-1	SOCKET-IC, 14 PIN DUAL IN-LINE	1620-0273	2
4	LERCO	501-000-D	PAD-TSTR, 5 LEAD, .346 DIA	9690-0001	2
5	SCANBE	S202	HANDLE-EJECTOR, LEVER ACTION	1270-0409	2
6	ESNA	79-022-094-0250	PIN-SPRING, .094 DIA X .250 LG	7280-0270	2
8	MILTON ROSS	A10042-DAP	PAD-TSTR, .250 DIA X .080 DP	9690-0104	2
9	MICORDOT	202-3942	CABLE-SHLDED, TWST PR 28 GA BLK	7910-0528	AR
10		79059A014	BRACKET-SUPPORT	3320-2791	1
11	MINCOM	79059A021	LABEL-IDENT	3550-2346	1

Mincom Division 3M COMPANY
300 SOUTH LEWIS ROAD • CAMARILLO CALIFORNIA 93010

PARTS LIST

12578 CODE IDENT | PL 79104A100 SHEET OF | G REV

TITLE: HOUSING ASSY – SIGNAL ELECTRONICS, 24 CH

CAT. NO. 83-4930-3342

FIND NO.- DESIG	MFG NAME	MFG PART NO.	NOMENCLATURE OR DESCRIPTION	CAT. NO.	QTY
A1,A2,A3	MINCOM	79059C004	PC4438 - SIG ELECT, MOTHER BD	83-3640-2238	3
A1J1,A1J2,A1J3, A2J1,A2J2,A2J3, A3J1,A3J2,A3J3	MOLEX	09-18-5121	CONNECTOR PCB, 12 CONT .093 THK X .625 WD	1610-1673	9
J21,J22,J23,J24,J25	WINCHESTER	SREC-26-SJ	CONN–REC., RCK/PNL, 26 SOC CONT	1610-1194	5
104P5	VIKING	2YK15S/1-2	CONN–P.C., ELEC, PIERCD 15 CON	1610-0797	1
XA1-A THRU XA24-A XA1-B THRU XA24-B	VIKING	2VK22S/2-2	CONNECTOR PCB, 22 CONT .328 WD X .406 DP	1610-0820	48
1	MINCOM	79059A001	SUPPORT, CARD GUIDE	3340-0781	2
2	MINCOM	79059A002	BRACKET, ELECT HSG	3320-2579	2
3	MINCOM	79059A003	SUPPORT, CONN, MTG	3340-0782	1
4	MINCOM	79059A006	SPACER, CONN	3350-0803	12
5	MINCOM	79000A032	LABEL–IDENT, CHANNEL	3550-2124	1

Mincom Division 3M COMPANY
300 SOUTH LEWIS ROAD • CAMARILLO, CALIFORNIA 93010

PARTS LIST

12578 CODE IDENT	PL 79104A100 SHEET OF	G REV

TITLE: HOUSING ASSY–SIGNAL ELECTRONICS, 24 CH

CAT. NO.: 83-4930-3342

FIND NO.- DESIG	MFG NAME	MFG PART NO.	NOMENCLATURE OR DESCRIPTION	CAT. NO.	QTY
				83-	
7	H.H. SMITH	776	CLAMP–CABLE, NYLON, .4375 DIA	7650-0006	12
8	WINCHESTER	100-54024S	SOCKET–CONTACT, CRIMP, 24, 26, & 28 GA	1610-1737	74
9	WINCHESTER	100-54028S	SOCKET–CONTACT, CRIMP, 28-30 GA	1610-1736	48
10	MICRO DOT	202-3932	WIRE–SHLDED, TWST PAIR	7910-0420	AR
11	MINCOM	79000A052	LABEL–IDENT, 16 TR PLAY BACK	3550-2180	1
12	VIKING	091-0024-000	INSERT–POLARIZING, CONN, .300 LG	1610-0760	1
13	ALPHA	1231	SHIELDING–BRAID, .250 DIA	7910-0117	AR
14	3M	3025-050	TUBING–CLEAR, VINYL, .203 ID	7910-0277	AR
15	T & B	RA853	TERM–LUG, INSUL, R TG, .26 WD	9630-0203	6
16	T & B	RB853	TERM–LUG, INSUL, R TG, .31 WD	9630-0206	1
18	VIKING	091-0024-000	INSERT–POLARIZING, CONN, .300 LG	1610-0760	1
19	MINCOM	79013B025	BRACKET–MTG, CONNECTOR	3320-2763	2
20	AMP	201182-1	CLAMP–STRAIN RELIEF, .596 SQ	1650-0714	2
21	THOM & BETTS	RSK200	FERRULE–SHLD, CABLE GND, 11/32 WD	1690-0436	50
22	THOM & BETTS	RSK100	FERRULE–SHLD, CABLE GND, 5/16 WD	1690-0435	24

3M Mincom Division MINNESOTA MINING AND MANUFACTURING CO.	PARTS LIST	12578 CODE IDENT	PL 79104A 200	G REV
	TITLE HOUSING ASSY - SIGNAL ELECTRONICS, 16 CH			CAT. NO. 83-4930- 3343

FIND NO.- DESIG	MFG NAME	MFG PART NO.	NOMENCLATURE OR DESCRIPTION	CAT. NO.	QTY
A1, A2	MINCOM	79059C004	PC4438-SIG ELECT, MOTHER BOARD	83-3640-2238	2
A1J1,A1J2,A1J3, A2J1,A2J2,A2J3	MOLEX	09-18-5121	CONNECTOR PCB, 12 CONT .093THK X .625WD	1610-1673	6
J21,J22,J23,J24, J25	WINCHESTER	SREC-26-SJ	CONN-REC., RCK/PNL, 26 SOC CONT	1610-1194	5
104P5	VIKING	2YK15S/1-2	CONN-P.C., ELEC, PIERCD 15 CON	1610-0797	1
XA1-A THRU XA16-A XA1-B THRU XA16-B	VIKING	2VK22S/2-2	CONNECTOR PCB, 22 CONT .328WD X .406DP	1610-0820	32
1	MINCOM	79059A001	SUPPORT, CARD GUIDE	3340-0781	2
2	MINCOM	79059A002	BRACKET, ELECT HSG	3320-2579	2
3	MINCOM	79059A003	SUPPORT, CONN, MTG	3340-0782	1
4	MINCOM	79059A006	SPACER, CONN	3350-0803	8
5	MINCOM	79000A032	LABEL-IDENT, CHANNEL	3550-2124	1

Mincom Division 3M COMPANY
300 SOUTH LEWIS ROAD • CAMARILLO, CALIFORNIA 93010

PARTS LIST

12578 CODE IDENT

PL 79104A200 SHEET OF

G REV

TITLE: HOUSING ASSY—SIGNAL ELECTRONICS, 16 CH

CAT. NO. 83-4930-3343

FIND NO.- DESIG	MFG NAME	MFG PART NO.	NOMENCLATURE OR DESCRIPTION	CAT. NO.	QTY
7	H. H. SMITH	776	CLAMP—CABLE, NYLON, .4375 DIA	83-7650-0006	8
8	WINCHESTER	100-54024S	SOCKET—CONTACT, CRIMP, 24, 26, & 28 GA	1610-1737	49
9	WINCHESTER	100-54028S	SOCKET—CONTACT, CRIMP, 28-30 GA	1610-1736	32
10	MICRO DOT	202-3932	WIRE—SHLDED, TWST PAIR	7910-0420	AR
11	VIKING	091-0024-000	INSERT—POLARIZING, CONN, .300 LG	1610-0760	1
12	ALPHA	1231	SHIELDING—BRAID, .250 DIA	7910-0117	AR
13	3M	3025-050	TUBING—CLEAR, VINYL, .203 ID	7910-0277	AR
14	T & B	RA853	TERM—LUG, INSUL, R TG, .26 WD	9630-0203	6
15	T & B	RB853	TERM—LUG, INSUL, R TG, .31 WD	9630-0206	1
16	MINCOM	79013B025	BRACKET—MTG, CONNECTOR	3320-2763	2
17	AMP	201182-1	CLAMP—STRAIN RELIEF, .596 SQ	1650-0714	2
19	THOM & BETTS	RSK200	FERRULE—SHLD, CABLE GND, 11/32 WD	1690-0436	34
20	THOM & BETTS	RSK100	FERRULE—SHLD, CABLE GND, 5/16 WD	1690-0435	16

3M Mincom Division MINNESOTA MINING AND MANUFACTURING CO.	PARTS LIST	12578 CODE IDENT	PL 79104A 300	G REV
	TITLE HOUSING ASSY - SIGNAL ELECTRONICS, 8 CH			CAT. NO. 83-4930- 3344

FIND NO.- DESIG	MFG NAME	MFG PART NO.	NOMENCLATURE OR DESCRIPTION	CAT. NO.	QTY
A1,	MINCOM	79059C004	PC 4438-SIG ELECT, MOTHER BOARD	83-3640-2238	1
A1J1,A1J2,A1J3	MOLEX	09-18-5121	CONNECTOR PCB, 12 CONT .093THK X .625WD	1610-1673	3
J21,J23,J24	WINCHESTER	SREC-26-SJ	CONN-REC., RCK/PNL. 26 SOC CONT	1610-1194	3
104P5	VIKING	2YK15S/1-2	CONN-P.C., ELEC, PIERCD 15 CON	1610-0797	1
XA1-A THRU XA8-A XA1-B THRU XA8-B	VIKING	2VK22S/2-2	CONNECTOR PCB, 22 CONT .328WD X .406DP	1610-0820	16
1	MINCOM	79059A001	SUPPORT, CARD GUIDE	3340-0781	2
2	MINCOM	79059A002	BRACKET, ELECT HSG	3320-2579	2
3	MINCOM	79059A003	SUPPORT, CONN, MTG	3340-0782	1
4	MINCOM	79059A006	SPACER, CONN	3350-0803	4
5	MINCOM	79000A032	LABEL-IDENT, CHANNEL	3550-2124	1

Mincom Division 3M
300 SOUTH LEWIS ROAD - CAMARILLO CALIFORNIA 93010

PARTS LIST

12578 CODE IDENT

PL 79104A300

G REV

TITLE HOUSING ASSY-SIGNAL ELECTRONICS, 8 CH

CAT. NO. 83-4930-3344

FIND NO.- DESIG	MFG NAME	MFG PART NO.	NOMENCLATURE OR DESCRIPTION	CAT. NO.	QTY
				83-	
7	H.H. SMITH	776	CLAMP-CABLE, NYLON, .4375 DIA	7650-0006	4
8	WINCHESTER	100-54024S	SOCKET-CONTACT, CRIMP, 24, 26, & 28 GA	1610-1737	25
9	WINCHESTER	100-54028S	SOCKET-CONTACT, CRIMP, 28-30 GA	1610-1736	16
10	MICRO DOT	202-3932	WIRE-SHLDED, TWST PAIR	7910-0420	AR
11	VIKING	091-0024-000	INSERT-POLARIZING, CONN, .300 LG	1610-0760	1
12	ALPHA	1231	SHIELDING-BRAID, .250 DIA	7910-0117	AR
13	3M	3025-050	TUBING-CLEAR, VINYL, .203 ID	7910-0277	AR
14	T & B	RA853	TERM-LUG, INSUL, R TG, .26 WD	9630-0203	6
15	T & B	RB853	TERM-LUG, INSUL, R TG, .31 WD	9630-0200	1
17	MINCOM	79013B025	BRACKET-MTG, CONNECTOR	3320-2763	2
18	AMP	201182-1	CLAMP-STRAIN RELIEF, .596 SQ	1650-0714	2
19	THOM & BETTS	RSK200	FERRULE-SHLD, CABLE GND, 11/32 WD	1690-0436	17
20	THOM & BETTS	RSK100	FERRULE-SHLD, CABLE GND, 5/16 WD	1690-0435	9

3M Mincom Division	PARTS LIST	12578 CODE IDENT	PL 79104A 400	G REV
	TITLE HOUSING ASSY - SIGNAL ELECTRONICS, 4 CH			CAT NO. 83-4930- 3345

FIND NO.- DESIG	MFG NAME	MFG PART NO.	NOMENCLATURE OR DESCRIPTION	CAT. NO.	QTY
A1,	MINCOM	79059C004	PC4438 SIG ELECT, MOTHER BOARD	83-3640-2238	1
A1J1,A1J2,A1J3	MOLEX	09-18-5121	CONNECTOR PCB, 12 CONT .093THK X .625WD	1610-1673	3
J21,J23,J24	WINCHESTER	SREC-26-SJ	CONN-REC., RCK/PNL, 26 SOC CONT	1610-1194	3
104P5	VIKING	2YK15S/1-2	CONN-P.C., ELEC, PIERCD 15 CON	1610-0797	1
XA1-A THRU XA 4-A XA1-B THRU XA 4-B	VIKING	2VK22S/2-2	CONNECTOR PCB, 22 CONT .328WD X .406DP	1610-0820	8
1	MINCOM	79059A001	SUPPORT, CARD GUIDE	3340-0781	2
2	MINCOM	79059A002	BRACKET, ELECT HSG	3320-2579	2
3	MINCOM	79059A003	SUPPORT, CONN, MTG	3340-0782	1
4	MINCOM	79059A006	SPACER, CONN	3350-0803	4
5	MINCOM	79000A032	LABEL-IDENT, CHANNEL	3550-2124	1

Mincom Division 3M
300 SOUTH LEWIS ROAD · CAMARILLO CALIFORNIA 93010

PARTS LIST

12578 CODE IDENT | PL 79104A400 | G REV

TITLE: HOUSING ASSY-SIGNAL ELECTRONICS, 4 CH

CAT. NO. 83-4930-3345

FIND NO.- DESIG	MFG NAME	MFG PART NO.	NOMENCLATURE OR DESCRIPTION	CAT. NO.	QTY
				83-	
7	H.H. SMITH	776	CLAMP-CABLE, NYLON, .4375 DIA	7650-0006	2
8	WINCHESTER	100-54024S	SOCKET-CONTACT, CRIMP, 24, 26, & 28 GA	1610-1737	13
9	WINCHESTER	100-54028S	SOCKET-CONTACT, CRIMP, 28-30 GA	1610-1736	13
10	MICRO DOT	202-3932	WIRE-SHLDED, TWST PAIR	7910-0420	AR
11	VIKING	091-0024-000	INSERT-POLARIZING, CONN, .300 LG	1610-0760	1
12	ALPHA	1231	SHIELDING-BRAID, .250 DIA	7910-0117	AR
13	3M	3025-050	TUBING, CLEAR, VINYL, .203 ID	7910-0277	AR
14	T & B	RA853	TERM-LUG, INSUL, R TG, .26 WD	9630-0203	6
15	T & B	RB853	TERM-LUG, INSUL, R TG, .31 WD	9630-0206	1
17	MINCOM	79013B025	BRACKET-MTG, CONNECTOR	3320-2763	2
18	AMP	201182-1	CLAMP-STRAIN RELIEF, .596 SQ	1650-0714	2
19	MINCOM	79059A015-1	PANEL-FILLER, SIGNAL ELECTRONICS	3360-2115	1
20	THOM & BETTS	RSK200	FERRULE-SHLD, CABLE GND, 11/32 WD	1690-0436	9
21	THOM & BETTS	RSK100	FERRULE-SHLD, CABLE GND, 5/16 WD	1690-0435	5

3M Mincom Division — MINNESOTA MINING AND MANUFACTURING CO.	PARTS LIST	12578 CODE IDENT	PL 79104A 500	G REV
	TITLE HOUSING ASSY - SIGNAL ELECTRONICS, 2 CH		CAT. NO. 83-4930- 3346	

FIND NO.- DESIG	MFG NAME	MFG PART NO.	NOMENCLATURE OR DESCRIPTION	CAT. NO.	QTY
A1,	MINCOM	79059C004	PC4438-SIG ELECT, MOTHER BOARD	83-3640-2238	1
A1J1,A1J2,A1J3	MOLEX	09-18-5121	CONNECTOR PCB, 12 CONT .093THK X .625WD	1610-1673	3
J21,J23,J24	WINCHESTER	SREC-26-SJ	CONN-REC., RCK/PNL, 26 SOC CONT	1610-1194	3
104P5	VIKING	2YK15S/1-2	CONN-P.C., ELEC, PIERCD 15 CON	1610-0797	1
XA1-A XA2-A XA1-B XA2-B	VIKING	2VK22S/2-2	CONNECTOR PCB, 22 CONT .328WD X .406DP	1610-0820	4
1	MINCOM	79059A001	SUPPORT, CARD GUIDE	3340-0781	2
2	MINCOM	79059A002	BRACKET, ELECT HSG	3320-2579	2
3	MINCOM	79059A003	SUPPORT, CONN, MTG	3340-0782	1
4	MINCOM	79059A006	SPACER, CONN	3350-0803	4
5	MINCOM	79000A032	LABEL-IDENT, CHANNEL	3550-2124	1

3M Mincom Division

PARTS LIST

12578 CODE IDENT | PL 79104A 500 | G REV

TITLE HOUSING ASSY-SIGNAL ELECTRONICS, 2 CH

CAT. NO. 83-4930- 3346

FIND NO - DESIG	MFG NAME	MFG PART NO.	NOMENCLATURE OR DESCRIPTION	CAT. NO.	QTY
				83-	
7	H.H. SMITH	776	CLAMP-CABLE, NYLON, .4375 DIA	7650-0006	1
8	WINCHESTER	100-54024S	SOCKET-CONTACT, CRIMP, 26, 26 & 28 GA	1610-1737	7
9	WINCHESTER	100-54028S	SOCKET-CONTACT, CRIMP, 28-30 GA	1610-1736	4
10	MICRO DOT	202-3932	WIRE SHLDED, TWST PAIR	7910-0420	AR
11	VIKING	091-0024-000	INSERT-POLARIZING, CONN, .300 LG	1610-0760	1
12	ALPHA	1231	SHIELDING-BRAID, .250 DIA	7910-0117	AR
13	3M	3025-050	TUBING, CLEAR, VINYL, .203 ID	7910-0277	AR
14	T & B	RA853	TERM-LUG, INSUL, R TG, .26 WD	9630-0203	6
15	T & B	RB853	TERM-LUG, INSUL, R TG, .31 WD	9630-0206	1
16	MINCOM	79013B025	BRACKET-MTG, CONNECTOR	3320-2763	2
17	AMP	201182-1	CLAMP-STRAIN RELIEF, .596 SQ	1650-0714	2
18	MINCOM	79059A015-1	PANEL-FILLER, SIGNAL ELECTRONICS	3360-2115	1
19	THOM & BETTS	RSK200	FERRULE-SHLD, CABLE GND, 11/32 WD	1690-0436	5
20	THOM & BETTS	RSK100	FERRULE-SHLD, CABLE GND, 5/16 WD	1690-0435	3

3M Mincom Division (MINNESOTA MINING AND MANUFACTURING CO.)	PARTS LIST	12578 CODE IDENT	PL 79104A 600	G REV
	TITLE HOUSING ASSY - SIGNAL ELECTRONICS, 1 CH		CAT. NO. 83-4930- 3347	

FIND NO.- DESIG	MFG NAME	MFG PART NO.	NOMENCLATURE OR DESCRIPTION	CAT. NO.	QTY
A1,	MINCOM	79059C004	PC4438-SIG ELECT, MOTHER BOARD	83-3640-2238	1
A1J1,A1J2,A1J3	MOLEX	09-18-5121	CONNECTOR PCB, 12 CONT .093THK X .625WD	1610-1673	3
J21,J23,J24	WINCHESTER	SREC-26-SJ	CONN-REC., RCK/PNL, 26 SOC CONT	1610-1194	3
104P5	VIKING	2YK15S/1-2	CONN-P.C., ELEC, PIERCD 15 CON	1610-0797	1
XA1-A XA1-B	VIKING	2VK22S/2-2	CONNECTOR PCB, 22 CONT .328WD X .406DP	1610-0820	2
1	MINCOM	79059A001	SUPPORT, CARD GUIDE	3340-0781	2
2	MINCOM	79059A002	BRACKET, ELECT HSG	3320-2579	2
3	MINCOM	79059A003	SUPPORT, CONN, MTG	3340-0782	1
4	MINCOM	79059A006	SPACER, CONN	3350-0803	1
5	MINCOM	79000A032	LABEL-IDENT, CHANNEL	3550-2124	1

3M Mincom Division

PARTS LIST

12578 CODE IDENT | PL 79104A 600 | G REV

TITLE HOUSING ASSY-SIGNAL ELECTRONICS, 1 CH

CAT. NO. 83-4930- 3347

FIND NO.- DESIG	MFG NAME	MFG PART NO.	NOMENCLATURE OR DESCRIPTION	CAT. NO.	QTY
				83-	
7	H.H. SMITH	774	CLAMP- STRAIN, .313 ID	7650-0005	3
8	VIKING	091-0024-000	INSERT-POLARIZING. CONN, .300 LG	1610-0760	1
9	WINCHESTER	100-54028S	SOC. CONT, CRIMP, 28-30 GA	1610-1736	4
10	MICRO DOT	202-3932	WIRE-SHIELDED, TWST PAIR	7910-0420	AR
11	ALPHA	1231	SHIELDING-BRAID, .250 DIA	7910-0117	AR
12	3M	3025-050	TUBING- CLEAR, VINYL, .203 ID	7910-0277	AR
13	T & B	RA853	TERM-LUG, INSUL, R TG, .26 WD	9630-0203	6
14	T & B	RB853	TERM-LUG, INSUL, R TG, .31 WD	9630-0206	1
16	MINCOM	79013B025	BRACKET-MTG, CONNECTOR	3320-2763	2
17	AMP	201182-1	CLAMP-STRAIN RELIEF, .596 SQ	1650-0714	2
18	MINCOM	79059A015-1	PANEL-FILLER, SIGNAL ELECTRONICS	3360-2115	1
19	WINCHESTER	100-54024S	SOCKET-CONTACT, CRIMP, 24, 26 & 28 GA	1610-1737	2
20	THOM & BETTS	RSK200	FERRULE-SHLD, CABLE GND, 11/32 WD	1690-0436	3
21	THOM & BETTS	RSK100	FERRULE-SHLD, CABLE GN, 5/16 WD	1690-0435	2

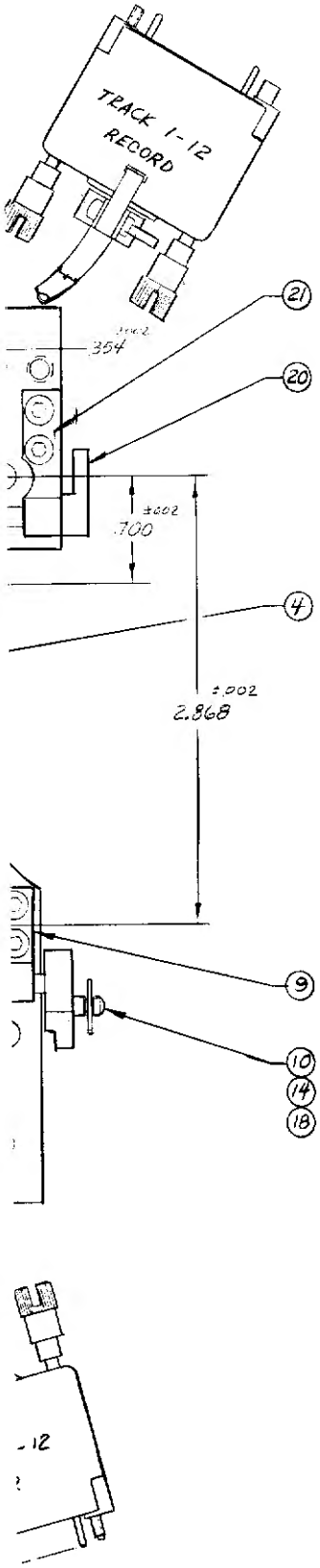

				25
122		83-1610-1331	CONTACT PIN	24
1	79119A005	83-3340-0798	SUPPORT-DOOR REAR	23
5		83-1610-1728	CONNECTOR-RECPT W/HOOD 26 PIN	22
1	79119A007	83-3340-0799	SUPPORT-DOOR REAR	21
1	79119A006	83-3210-0489	LEVER-HEAD DOOR	20
1	79119A050	83-4330-0481	DOOR ASSY-RECORD	19
1		83-7270-0771	CLIP-RETAINER WIRE .063 WIDE	18
6		83-9261-4062	WASHER-FLAT #4	17
6		83-9261-4303	WASHER-LOCK SPLIT #4	16
2		83-9260-6573	SCREW-FLAT HD 4-40 x 3/8	15
3		83-9261-0270	SETSCREW, CUP POINT 4-40 x 3/16	14
7		83-9261-2002	SCREW-CAP SOC HD 4-40 x 3/8	13
6		83-9261-2001	SCREW-CAP SOC HD 4-40 x 1/4	12
2	56119A001-4	83-3340-0879	SUPPORT-TRIM HD COVER	11
1	56119A057	83-3210-0356	CRANK-ACTUATOR	10
1	56119A056	83-3340-0706	SUPPORT-DOOR REAR	9
1	56119A055	83-3340-0705	SUPPORT-DOOR FRONT	8
1	56119A050	83-4950-1415	SHIELD DOOR ASSY-2 INCH	7
2	D9002-002	83-3950-0148	NUT-AZIMUTH	6
2	16002-008-4	83-3950-0939	SCREW-AZIMUTH	5

1	HA44424O4E2C00	83-0001-0351	HEAD-ERASE, 24TK AUDIO 2"	4
1	HA13824O4E2A00	83-0001-0349	HEAD-READ, 24TK AUDIO 2"	3
1	HA23824O4E2B00	83-0001-0350	HEAD-WRITE 24TK AUDIO 2"	2
1	56119A010	83-3950-1412	PLATE-HEAD MTG	1
QTY REQD	PART NO	CATALOG NO	DESCRIPTION	ITEM NO

HEAD SET ASSY - 24 TK
READ/WRITE/ERASE AUDIO
MODEL 79

79119A100